P01249

ACORDUL
de la Cape Town din 2012 privind punerea în aplicare a dispoziţiilor Protocolului de la Torremolinos din 1993 referitor la Convenţia internaţională de la Torremolinos pentru siguranţa navelor de pescuit din 1977

Cape Town, 11 octombrie 2012

COPIE CERTIFICATĂ
TEXT ÎN LIMBA ENGLEZĂ

النصّ الجامع للوائح المرفقة ببروتوكول توريمولينوس لعام 1993
المتعلق باتفاقية توريمولينوس الدولية لسلامة سفن الصيد لعام 1977 ،
في صيغتها المعدّلة باتفاق كيب تاون لعام 2012

《经2012年开普敦协定修订的
1977年托雷莫利诺斯国际渔船安全公约
1993年托雷莫利诺斯议定书》
附则规则的综合文本

CONSOLIDATED TEXT OF THE REGULATIONS ANNEXED TO THE TORREMOLINOS PROTOCOL OF 1993 RELATING TO THE TORREMOLINOS INTERNATIONAL CONVENTION FOR THE SAFETY OF FISHING VESSELS, 1977, AS MODIFIED BY THE CAPE TOWN AGREEMENT OF 2012

TEXTE RÉCAPITULATIF DES RÈGLES DE L'ANNEXE DU PROTOCOLE DE TORREMOLINOS DE 1993 RELATIF À LA CONVENTION INTERNATIONALE DE TORREMOLINOS SUR LA SÉCURITÉ DES NAVIRES DE PÊCHE, 1977, TEL QUE MODIFIÉ PAR L'ACCORD DU CAP DE 2012

СВОДНЫЙ ТЕКСТ ПРАВИЛ, ПРИЛОЖЕННЫХ К ТОРРЕМОЛИНОССКОМУ ПРОТОКОЛУ 1993 ГОДА К ТОРРЕМОЛИНОССКОЙ МЕЖДУНАРОДНОЙ КОНВЕНЦИИ ПО БЕЗОПАСНОСТИ РЫБОЛОВНЫХ СУДОВ 1977 ГОДА, ИЗМЕНЕННЫХ КЕЙПТАУНСКИМ СОГЛАШЕНИЕМ 2012 ГОДА

TEXTO REFUNDIDO DE LAS REGLAS DEL ANEXO DEL PROTOCOLO DE TORREMOLINOS DE 1993 RELATIVO AL CONVENIO INTERNACIONAL DE TORREMOLINOS PARA LA SEGURIDAD DE LOS BUQUES PESQUEROS, 1977, EN SU FORMA MODIFICADA POR EL ACUERDO DE CIUDAD DEL CABO DE 2012

INTERNATIONAL REGULATIONS FOR THE SAFETY OF FISHING VESSELS

CONSOLIDATED TEXT OF THE REGULATIONS ANNEXED TO THE TORREMOLINOS PROTOCOL OF 1993 RELATING TO THE TORREMOLINOS INTERNATIONAL CONVENTION FOR THE SAFETY OF FISHING VESSELS, 1977, AS MODIFIED BY THE CAPE TOWN AGREEMENT OF 2012 ON THE IMPLEMENTATION OF THE PROVISIONS OF THE TORREMOLINOS PROTOCOL OF 1993 RELATING TO THE TORREMOLINOS INTERNATIONAL CONVENTION FOR THE SAFETY OF FISHING VESSELS, 1977 (AGREEMENT)

Note: *The footnotes included in this consolidated text do not form part of the Regulations but have been inserted by the Secretariat for ease of reference. In all cases, the reader must make use of the latest version of codes, guidance, recommendations, etc., referred to in the footnotes.*

REGULATIONS FOR THE CONSTRUCTION AND EQUIPMENT OF FISHING VESSELS

CHAPTER I
GENERAL PROVISIONS

Regulation 1
Application

(1) Unless expressly provided otherwise, the provisions of this annex shall apply to new vessels.

(2) For the purpose of this Protocol[1], the Administration may decide to use the following gross tonnage in place of length (L) as the basis for measurement for all chapters:

(a) a gross tonnage of 300 shall be considered equivalent to a length (L) of 24 m;

(b) a gross tonnage of 950 shall be considered equivalent to a length (L) of 45 m;

(c) a gross tonnage of 2,000 shall be considered equivalent to a length (L) of 60 m; and

(d) a gross tonnage of 3,000 shall be considered equivalent to a length (L) of 75 m.

(3) Each Party which avails itself of the possibility afforded in paragraph (2) shall communicate to the Organization the reasons for that decision.

(4) Where a Party has concluded that it is not immediately possible to implement all of the measures provided for in chapters VII, VIII, IX and X on existing vessels, the Party may, in accordance with a plan, progressively implement the provisions of chapter IX over a period of no more than 10 years and the provisions of chapters VII, VIII and X over a period of no more than five years.

---

1 In accordance with article 2 of the 2012 Cape Town Agreement, a reference to "the present Protocol" or to "the Convention", respectively, shall be deemed to mean a reference to the Agreement.

(5) Each Party which avails itself of the possibility afforded in paragraph (4) shall in its first communication to the Organization:

(a) indicate the provisions of chapters VII, VIII, IX and X to be progressively implemented;

(b) explain the reasons for the decision taken under paragraph (4);

(c) describe the plan for progressive implementation, which shall not be for more than five or 10 years, as appropriate; and

(d) in subsequent communications on the application of this Protocol, describe measures taken with a view to giving effect to the provisions of the Protocol and progress made in line with the time frame established.

(6) The Administration may exempt a vessel from annual surveys, as specified in regulations 7(1)(d) and 9(1)(d), if it considers that the application is unreasonable and impracticable in view of the vessel's operating area and the type of vessel.

Regulation 2
Definitions

(1) *New vessel* is a vessel for which, on or after the date of entry into force of the present Protocol:

(a) the building or major conversion contract is placed; or

(b) the building or major conversion contract has been placed before the date of entry into force of the present Protocol, and which is delivered three years or more after the date of such entry into force; or

(c) in the absence of a building contract:

(i) the keel is laid; or

(ii) construction identifiable with a specific vessel begins; or

(iii) assembly has commenced comprising at least 50 tonnes or 1% of the estimated mass of all structural material, whichever is less.

(2) *Existing vessel* is a fishing vessel which is not a new vessel.

(3) *Approved* means approved by the Administration.

(4) *Crew* means the skipper and all persons employed or engaged in any capacity on board a vessel on the business of that vessel.

(5) L*ength (L)* shall be taken as 96% of the total length on a waterline at 85% of the least moulded depth measured from the keel line, or as the length from the foreside of the stem to the axis of the rudder stock on that waterline, if that be greater. In vessels designed with rake of keel the waterline on which this length is measured shall be parallel to the designed waterline.

(6) *Forward and after perpendiculars* shall be taken at the forward and after ends of the length (L). The forward perpendicular shall be coincident with the foreside of the stem on the waterline on which the length is measured.

(7) *Breadth (B)* is the maximum breadth of the vessel, measured amidships to the moulded line of the frame in a vessel with a metal shell and to the outer surface of the hull in a vessel with a shell of any other material.

(8) (a) The *moulded depth* is the vertical distance measured from the keel line to the top of the working deck beam at side.

(b) In vessels having rounded gunwales, the moulded depth shall be measured to the point of intersection of the moulded lines of the deck and side shell plating, the lines extending as though the gunwale were of angular design.

(c) Where the working deck is stepped and the raised part of the deck extends over the point at which the moulded depth is to be determined, the moulded depth shall be measured to a line of reference extending from the lower part of the deck along a line parallel with the raised part.

(9) *Depth (D)* is the moulded depth amidships.

(10) *Deepest operating waterline* is the waterline related to the maximum permissible operating draught.

(11) *Amidships* is the mid-length of L.

(12) *Midship section* is that section of the hull defined by the intersection of the moulded surface of the hull with a vertical plane perpendicular to the waterline and centreline planes passing through amidships.

(13) *Keel line* is the line parallel to the slope of keel passing amidships through:

(a) the top of the keel or line of intersection of the inside of shell plating with the keel where a bar keel extends above that line of a vessel with a metal shell; or

(b) the rabbet lower line of the keel of a vessel with a shell of wood or a composite vessel; or

(c) the intersection of a fair extension of the outside of the shell contour at the bottom with the centreline of a vessel with a shell of material other than wood and metal.

(14) *Working deck* is generally the lowest complete deck above the deepest operating waterline from which fishing is undertaken. In vessels fitted with two or more complete decks, the Administration may accept a lower deck as a working deck provided that that deck is situated above the deepest operating waterline.

(15) *Superstructure* is the decked structure on the working deck extending from side to side of the vessel or with the side plating not being inboard of the shell plating more than 0.04B.

(16) *Enclosed superstructure* is a superstructure with:

(a) enclosing bulkheads of efficient construction;

(b) access openings, if any, in those bulkheads fitted with permanently attached weathertight doors of a strength equivalent to the unpierced structure which can be operated from each side; and

(c) other openings in sides or ends of the superstructure fitted with efficient weathertight means of closing.

A bridge or poop shall not be regarded as enclosed unless access is provided for the crew to reach machinery and other working spaces inside those superstructures by alternative means which are available at all times when bulkhead openings are closed.

(17) *Superstructure deck* is that complete or partial deck forming the top of a superstructure, deckhouse or other erection situated at a height of not less than 1.8 m above the working deck. Where this height is less than 1.8 m, the top of such deckhouses or other erections shall be treated in the same way as the working deck.

(18) *Height of a superstructure or other erection* is the least vertical distance measured at side from the top of the deck beams of a superstructure or an erection to the top of the working deck beams.

(19) *Weathertight* means that in any sea conditions water will not penetrate into the vessel.

(20) *Watertight* means capable of preventing the passage of water through the structure in any direction under a head of water for which the surrounding structure is designed.

(21) *Collision bulkhead* is a watertight bulkhead up to the working deck in the forepart of the vessel which meets the following conditions:

(a) The bulkhead shall be located at a distance from the forward perpendicular:

(i) not less than 0.05L and not more than 0.08L for vessels of 45 m in length and over;

(ii) not less than 0.05L and not more than 0.05L plus 1.35 m for vessels of less than 45 m in length, except as may be allowed by the Administration;

(iii) in no case, less than 2 m.

(b) Where any part of the underwater body extends forward of the forward perpendicular, e.g. a bulbous bow, the distance stipulated in subparagraph (a) shall be measured from a point at mid-length of the extension forward of the forward perpendicular or from a point 0.015L forward of the forward perpendicular, whichever is less.

(c) The bulkhead may have steps or recesses provided they are within the limits prescribed in subparagraph (a).

(22) *Gross tonnage* means the gross tonnage calculated in accordance with the tonnage measurement regulations contained in Annex I to the International Convention on Tonnage Measurement of Ships, 1969, or any instrument amending or replacing it.

(23) *Anniversary date* means the day and the month of each year which will correspond to the date of expiry of the relevant certificate.

Regulation 3
Exemptions

(1) The Administration may exempt any vessel which embodies features of a novel kind from any of the requirements of chapters II, III, IV, V, VI and VII, the application of which might seriously impede research into the development of such features and their incorporation in vessels. Any such vessel shall, however, comply with safety requirements which, in the opinion of that Administration, are adequate for the service for which it is intended and are such as to ensure the overall safety of the vessel.

(2) Exemptions from the requirements of chapter IX are dealt with in regulation IX/3 and exemptions from chapter X are dealt with in regulation X/2.

(3) The Administration may exempt any vessel entitled to fly its flag from any of the requirements of this annex, if it considers that the application is unreasonable and impracticable in view of the type of vessel, the weather conditions and the absence of general navigational hazards, provided:

(a) the vessel complies with safety requirements which, in the opinion of that Administration, are adequate for the service for which it is intended and are such as to ensure the overall safety of the vessel and persons on board;

(b) the vessel is operating solely in:

(i) a common fishing zone established in adjoining marine areas under the jurisdiction of neighbouring States which have established that zone, in respect of vessels entitled to fly their flags, only to the extent and under the conditions that those States agree, in accordance with international law, to establish in this regard; or

(ii) the exclusive economic zone of the State of the flag it is entitled to fly, or, if that State has not established such a zone, in an area beyond and adjacent to the territorial sea of that State determined by that State in accordance with international law and extending not more than 200 nautical miles from the baselines from which the breadth of its territorial sea is measured; or

(iii) the exclusive economic zone or a marine area under the jurisdiction of another State, or a common fishing zone, in accordance with an agreement between the States concerned in accordance with international law, only to the extent and under the conditions that those States agree to establish in this regard; and

(c) the Administration notifies the Secretary-General of the terms and conditions on which the exemption is granted under this paragraph.

(4) An Administration which allows any exemption under paragraph (1) or (2) shall communicate to the Organization particulars of the same to the extent necessary to confirm that the level of safety is adequately maintained and the Organization shall circulate such particulars to the Parties for their information.

Regulation 4
Equivalents

(1) Where the present regulations require that a particular fitting, material, appliance or apparatus, or type thereof, shall be fitted or carried in a vessel, or that any particular provision shall be made, the Administration may allow any other fitting, material, appliance or apparatus, or type thereof, to be fitted or carried, or any other provision to be made in that vessel, if it is satisfied by trial thereof or otherwise that such fitting, material, appliance or apparatus, or type thereof, or provision, is at least as effective as that required by the present regulations.

(2) Any Administration which so allows, in substitution, a fitting, material, appliance or apparatus, or type thereof, or provision, shall communicate to the Organization particulars thereof together with a report on any trials made and the Organization shall circulate such particulars to other Parties for the information of their officers.

Regulation 5
Repairs, alterations and modifications

(1) A vessel which undergoes repairs, alterations, modifications and outfitting related thereto shall continue to comply with at least the requirements previously applicable to the vessel.

(2) Repairs, alterations and modifications of a major character and outfitting related thereto shall meet the requirements for a new vessel only to the extent of such repairs, alterations and modifications and in so far as the Administration deems reasonable and practicable.

Regulation 6
Inspection and survey

(1) The inspection and survey of vessels, so far as regards the enforcement of the provisions of the present regulations and the granting of exemptions therefrom, shall be carried out by officers of the Administration. The Administration may, however, entrust the inspections and surveys either to surveyors nominated for the purpose or to organizations recognized by it.

(2) An Administration nominating surveyors or recognizing organizations to conduct inspections and surveys as set forth in paragraph (1) shall as a minimum empower any nominated surveyor or recognized organization to:

(a) require repairs to a vessel; and

(b) carry out inspections and surveys if requested by the appropriate authorities of a port State.

The Administration shall notify the Organization of the specific responsibilities and conditions of the authority delegated to nominated surveyors or recognized organizations.

(3) When a nominated surveyor or recognized organization determines that the condition of the vessel or its equipment does not correspond substantially with the particulars of the certificate or is such that the vessel is not fit to proceed to sea without danger to the vessel or persons on board, such surveyor or organization shall immediately ensure that corrective action is taken and shall in due course notify the Administration. If such corrective action is not taken, the relevant certificate should be withdrawn and the Administration shall be notified immediately; and, if the vessel is in the port of another Party, the appropriate authorities of the port State shall also be notified immediately. When an officer of the Administration, a nominated surveyor or a recognized organization has notified the appropriate authorities of the port State, the Government of the port State concerned shall give such officer, surveyor or organization any necessary assistance to carry out their obligations under this regulation. When applicable, the Government of the port State concerned shall ensure that the vessel shall not sail until it can proceed to sea, or leave port for the purpose of proceeding to the appropriate repair yard, without danger to the vessel or persons on board.

(4) In every case, the Administration shall fully guarantee the completeness and efficiency of the inspection and survey and shall undertake to ensure the necessary arrangements to satisfy this obligation.

Regulation 7
Surveys of life-saving appliances and other equipment

(1) The life-saving appliances and other equipment as referred to in paragraph (2)(a) shall be subject to the surveys specified below:

(a) an initial survey before the vessel is put in service;

(b) a renewal survey at intervals specified by the Administration but not exceeding five years, except where regulations 13(2), 13(5) and 13(6) are applicable;

(c) a periodical survey within three months before or after the second anniversary date or within three months before or after the third anniversary date of the International Fishing Vessel Safety Certificate which shall take the place of one of the annual surveys specified in paragraph (1)(d). Alternatively, the Administration may decide that the periodical survey shall be carried out within three months before the second anniversary date and three months after the third anniversary date of the International Fishing Vessel Safety Certificate;

(d) an annual survey within three months before or after each anniversary date of the International Fishing Vessel Safety Certificate; and

(e) an additional survey either general or partial, according to the circumstances, shall be made after a repair resulting from investigations prescribed in regulation 10 or whenever any important repairs or renewals are made. The survey shall be such as to ensure that the necessary repairs or renewals have been effectively made, that the material and workmanship of such repairs or renewals are in all respects satisfactory, and that the vessel complies in all respects with the provisions of the present regulations and of the International Regulations for Preventing Collisions at Sea in force, and of the laws, decrees, orders and regulations promulgated as a result thereof by the Administration.

(2) The surveys referred to in paragraph (1) shall be carried out as follows:

(a) the initial survey shall include a complete inspection of the fire safety systems and appliances, life-saving appliances and arrangements except radio installations, the shipborne navigational equipment, pilot transfer arrangements and other equipment to which chapters II, III, IV, V, VI, VII, VIII and X apply to ensure that they comply with the requirements of the present regulations, are in satisfactory condition and are fit for the service for which the vessel is intended. The fire control plans, nautical publications, lights, shapes, means of making sound signals and distress signals shall also be subject to the above-mentioned survey for the purpose of ensuring that they comply with the requirements of the present regulations and, where applicable, the *International Regulations for Preventing Collisions at Sea* in force;

(b) the renewal and periodical surveys shall include an inspection of the equipment referred to in paragraph (2)(a) to ensure that it complies with the relevant requirements of the present regulations and the *International Regulations for Preventing Collisions at Sea* in force, is in satisfactory condition and is fit for the service for which the vessel is intended; and

(c) the annual survey shall include a general inspection of the equipment referred to in paragraph (2)(a) to ensure that it has been maintained in accordance with regulation 10(1) and that it remains satisfactory for the service for which the vessel is intended.

(3) The periodical and annual surveys referred to in paragraphs (1)(c) and (1)(d) shall be endorsed on the International Fishing Vessel Safety Certificate.

Regulation 8
Surveys of radio installations

(1) The radio installations, including those used in life-saving appliances, of vessels to which chapters VII and IX apply shall be subject to the surveys specified below:

(a) an initial survey before the vessel is put in service;

(b) a renewal survey at intervals specified by the Administration but not exceeding five years, except where regulations 13(2), 13(5) and 13(6) are applicable;

(c) a periodical survey within three months before or after each anniversary date of the International Fishing Vessel Safety Certificate; or a periodical survey within three months before or after the second anniversary date or within three months before or after the third anniversary date of the International Fishing Vessel Safety Certificate. Alternatively, the Administration may decide that the periodical survey shall be carried out within three months before the second anniversary date and three months after the third anniversary date of the International Fishing Vessel Safety Certificate; and

(d) an additional survey either general or partial, according to the circumstances, shall be made after a repair resulting from investigations prescribed in regulation 10 or whenever any important repairs or renewals are made. The survey shall be such as to ensure that the necessary

repairs or renewals have been effectively made, that the material and workmanship of such repairs or renewals are in all respects satisfactory, and that the vessel complies in all respects with the provisions of the present regulations and of the *International Regulations for Preventing Collisions at Sea* in force, and of the laws, decrees, orders and regulations promulgated as a result thereof by the Administration.

(2) The surveys referred to in paragraph (1) shall be carried out as follows:

(a) the initial survey shall include a complete inspection of the radio installations, including those used in life-saving appliances, to ensure that they comply with the requirements of the present regulations; and

(b) the renewal and periodical surveys shall include an inspection of the radio installations, including those used in life-saving appliances, to ensure that they comply with the requirements of the present regulations.

(3) The periodical surveys referred to in paragraph (1)(c) shall be endorsed on the International Fishing Vessel Safety Certificate.

Regulation 9
Surveys of structure, machinery and equipment

(1) The structure, machinery and equipment (other than items in respect of regulations 7 and 8) as referred to in paragraph (2)(a) shall be subject to the surveys and inspections specified below:

(a) an initial survey including an inspection of the outside of the vessel's bottom before the vessel is put in service;

(b) a renewal survey at intervals specified by the Administration but not exceeding five years, except where regulations 13(2), 13(5) and 13(6) are applicable;

(c) an intermediate survey within three months before or after the second anniversary date or within three months before or after the third anniversary date of the International Fishing Vessel Safety Certificate, which shall take the place of one of the annual surveys specified in paragraph (1)(d). Alternatively, the Administration may decide that the intermediate survey shall be carried out within three months before the second anniversary date and three months after the third anniversary date of the International Fishing Vessel Safety Certificate;

(d) an annual survey within three months before or after each anniversary date of the International Fishing Vessel Safety Certificate;

(e) a minimum of two inspections of the outside of the vessel's bottom during any five-year period, except where regulation 13(5) is applicable. Where regulation 13(5) is applicable, this five-year period may be extended to coincide with the extended period of validity of the certificate. In all cases the interval between any two such inspections shall not exceed 36 months; and

(f) an additional survey either general or partial, according to the circumstances, shall be made after a repair resulting from investigations prescribed in regulation 10, or whenever any important repairs or renewals are made. The survey shall be such as to ensure that the necessary repairs or renewals have been effectively made, that the material and workmanship of such repairs or renewals are in all respects satisfactory, and that the vessel complies in all respects with the provisions of the present regulations and of the International Regulations for Preventing Collisions at Sea in force, and of the laws, decrees, orders and regulations promulgated as a result thereof by the Administration.

(2) The surveys and inspections referred to in paragraph (1) shall be carried out as follows:

(a) the initial survey shall include a complete inspection of the structure, machinery and equipment. This survey shall be such as to ensure that the arrangements, materials, scantlings and workmanship of the structure, boilers and other pressure vessels, their appurtenances, main and auxiliary machinery including steering gear and associated control systems, electrical installation and other equipment comply with the requirements of the present regulations, are in satisfactory condition and are fit for the service for which the vessel is intended and that the required stability information is provided;

(b) the renewal survey shall include an inspection of the structure, machinery and equipment referred to in paragraph (2)(a) to ensure that they comply with the requirements of the present regulations, are in satisfactory condition and are fit for the service for which the vessel is intended;

(c) the intermediate survey shall include an inspection of the structure, boilers and other pressure vessels, machinery and equipment, the steering gear and the associated control systems and electrical installations to ensure that they remain satisfactory for the service for which the vessel is intended;

(d) the annual survey shall include a general inspection of the structure, machinery and equipment referred to in paragraph (2)(a), to ensure that they have been maintained in accordance with regulation 10(1) and that they remain satisfactory for the service for which the vessel is intended; and

(e) the inspection of the outside of the vessel's bottom and the survey of related items inspected at the same time shall be such as to ensure that they remain satisfactory for the service for which the vessel is intended.

(3) The intermediate and annual surveys and the inspections of the outside of the vessel's bottom referred to in paragraphs (1)(c), (1)(d) and (1)(e) shall be endorsed on the International Fishing Vessel Safety Certificate.

Regulation 10
Maintenance of conditions after survey

(1) The condition of the vessel and its equipment shall be maintained to conform with the provisions of the present regulations to ensure that the vessel in all respects will remain fit to proceed to sea without danger to the vessel or persons on board.

(2) After any survey of the vessel under regulation 7, 8 or 9 has been completed, no change shall be made in the structural arrangements, machinery, equipment and other items covered by the survey, without the sanction of the Administration.

(3) Whenever an accident occurs to a vessel or a defect is discovered, either of which affects the safety of the vessel or the efficiency or completeness of its life-saving appliances or other equipment, the skipper or owner of the vessel shall report at the earliest opportunity to the Administration, the nominated surveyor or recognized organization responsible for issuing the relevant certificate, who shall cause investigations to be initiated to determine whether a survey, as required by regulation 7, 8 or 9, is necessary. If the vessel is in a port of another Party, the skipper or owner shall also report immediately to the appropriate authorities of the port State and the nominated surveyor or recognized organization shall ascertain that such a report has been made.

Regulation 11
Issue or endorsement of certificates

(1) A certificate called an International Fishing Vessel Safety Certificate shall be issued, except for vessels exempted under regulation 3(3), after an initial or renewal survey to a fishing vessel which complies with the relevant requirements of chapters II, III, IV, V, VI, VII, VIII, IX and X and any other relevant requirements of the present regulations.

(2) The International Fishing Vessel Safety Certificate referred to in paragraph (1) shall be supplemented by a Record of Equipment.

(3) When an exemption is granted to a vessel under and in accordance with the provisions of the present regulations, except for vessels exempted under regulation 3(3), a certificate called an International Fishing Vessel Exemption Certificate shall be issued in addition to the certificate prescribed in this regulation.

(4) The certificates referred to in this regulation shall be issued or endorsed either by the Administration or by any person or organization authorized by it. In every case, that Administration assumes full responsibility for the certificates.

Regulation 12
Issue or endorsement of certificates by another Party

A Party may, at the request of the Administration, cause a vessel to be surveyed and, if satisfied that the requirements of the present regulations are complied with, shall issue or authorize the issue of certificates to the vessel and, where appropriate, endorse or authorize the endorsement of certificates on the vessel in accordance with the present regulations. Any certificate so issued shall contain a statement to the effect that it has been issued at the request of the Government of the State the flag of which the vessel is entitled to fly, and it shall have the same force and receive the same recognition as a certificate issued under regulation 11.

Regulation 13
Duration and validity of certificates

(1) An International Fishing Vessel Safety Certificate shall be issued for a period specified by the Administration which shall not exceed five years. An International Fishing Vessel Exemption Certificate shall not be valid for longer than the period of the certificate to which it refers.

(2) (a) Notwithstanding the requirements of paragraph (1), when the renewal survey is completed within three months before the expiry date of the existing certificate, the new certificate shall be valid from the date of completion of the renewal survey to a date not exceeding five years from the date of expiry of the existing certificate.

(b) When the renewal survey is completed after the expiry date of the existing certificate, the new certificate shall be valid from the date of completion of the renewal survey to a date not exceeding five years from the date of expiry of the existing certificate.

(c) When the renewal survey is completed more than three months before the expiry date of the existing certificate, the new certificate shall be valid from the date of completion of the renewal survey to a date not exceeding five years from the date of completion of the renewal survey.

(3) If a certificate is issued for a period of less than five years, the Administration may extend the validity of the certificate beyond the expiry date to the maximum period specified in paragraph (1), provided that the surveys referred to in regulations 7, 8 and 9 applicable when a certificate is issued for a period of five years are carried out as appropriate.

(4) If a renewal survey has been completed and a new certificate cannot be issued or placed on board the vessel before the expiry date of the existing certificate, the person or organization authorized by the Administration may endorse the existing certificate and such a certificate shall be accepted as valid for a further period which shall not exceed five months from the expiry date.

(5) If a vessel at the time when a certificate expires is not in a port in which it is to be surveyed, the Administration may extend the period of validity of the certificate but this extension shall be granted only for the purpose of allowing the vessel to complete its voyage to the port in which it is to be surveyed, and then only in cases where it appears proper and reasonable to do so. No certificate shall be extended for a period longer than three months, and a vessel to which an extension is granted shall not, on its arrival in the port in which it is to be surveyed, be entitled by virtue of such extension to leave that port without having a new certificate. When the renewal survey is completed, the new certificate shall be valid to a date not exceeding five years from the date of expiry of the existing certificate before the extension was granted.

(6) In special circumstances, as determined by the Administration, a new certificate need not be dated from the date of expiry of the existing certificate as required by paragraph (2)(b) or (5). In these special circumstances, the new certificate shall be valid to a date not exceeding five years from the date of completion of the renewal survey.

(7) If an annual, intermediate or periodical survey is completed before the period specified in the relevant regulations, then:

(a) the anniversary date shown on the relevant certificate shall be amended by endorsement to a date which shall not be more than three months later than the date on which the survey was completed;

(b) the subsequent annual, intermediate or periodical survey required by the relevant regulations shall be completed at the intervals prescribed by these regulations using the new anniversary date; and

(c) the expiry date may remain unchanged provided one or more annual, intermediate or periodical surveys, as appropriate, are carried out so that the maximum intervals between the surveys prescribed by the relevant regulations are not exceeded.

(8) A certificate issued under regulation 11 or 12 shall cease to be valid in any of the following cases:

(a) if the relevant surveys and inspections are not completed within the periods specified under regulations 7(1), 8(1) and 9(1);

(b) if the certificate is not endorsed in accordance with the present regulations; and

(c) upon transfer of the vessel to the flag of another State. A new certificate shall only be issued when the Government issuing the new certificate is fully satisfied that the vessel is in compliance with the requirements of regulations 10(1) and 10(2). In the case of a transfer between Parties, if requested within three months after the transfer has taken place, the Government of the State whose flag the vessel was formerly entitled to fly shall, as soon as possible, transmit to the Administration copies of the certificates carried by the vessel before a transfer and, if available, copies of the relevant survey reports.

Regulation 14
Forms of certificates and records of equipment

The certificates and records of equipment shall be drawn up in the form corresponding to the models given in the appendix to the Annex to the present Protocol. If the language used is neither English nor French, the text shall include a translation into one of these languages.[2]

Regulation 15
Availability of certificates

The certificates issued under regulations 11 and 12 shall be readily available on board for examination at all times.

Regulation 16
Acceptance of certificates

Certificates issued under the authority of a Party shall be accepted by the other Party for all purposes covered by the present Protocol. They shall be regarded by the other Party as having the same force as certificates issued by them.

Regulation 17
Privileges

The privileges of the present Protocol may not be claimed in favour of any vessel unless it holds appropriate valid certificates.

---

2 Refer to resolution A.561(14) on *Translation of the text of certificates.*

CHAPTER II

CONSTRUCTION, WATERTIGHT INTEGRITY AND EQUIPMENT

Regulation 1
Construction

(1) Strength and construction of hull, superstructures, deckhouses, machinery casings, companionways and any other structures and vessel's equipment shall be sufficient to withstand all foreseeable conditions of the intended service and shall be to the satisfaction of the Administration.

(2) The hull of vessels intended for operation in ice shall be strengthened in accordance with the anticipated conditions of navigation and area of operation.

(3) Bulkheads, closing devices and closures of openings in these bulkheads, as well as methods for their testing, shall be in accordance with the requirements of the Administration. Vessels constructed of material other than wood shall be fitted with a collision bulkhead and at least with watertight bulkheads bounding the main machinery space. Such bulkheads shall be extended up to the working deck. In vessels constructed of wood such bulkheads, which as far as practicable shall be watertight, shall also be fitted.

(4) Pipes piercing the collision bulkhead shall be fitted with suitable valves operable from above the working deck and the valve chest shall be secured at the collision bulkhead inside the forepeak. No door, manhole, ventilation duct or any other opening shall be fitted in the collision bulkhead below the working deck.

(5) Where a long forward superstructure is fitted, the collision bulkhead shall be extended weathertight to the deck next above the working deck. The extension need not be fitted directly over the bulkhead below provided it is located within the limits given in regulation I/2(21) and the part of the deck which forms the step is made effectively weathertight.

(6) The number of openings in the collision bulkhead above the working deck shall be reduced to the minimum compatible with the design and normal operation of the vessel. Such openings shall be capable of being closed weathertight.

(7) In vessels of 75 m in length and over, a watertight double bottom shall be fitted, as far as practicable, between the collision bulkhead and the afterpeak bulkhead.

Regulation 2
Watertight doors

(1) The number of openings in watertight bulkheads, as required by regulation 1(3), shall be reduced to the minimum compatible with the general arrangements and operational needs of the vessel; openings shall be fitted with watertight closing appliances to the satisfaction of the Administration. Watertight doors shall be of an equivalent strength to the adjacent unpierced structure.

(2) In vessels of less than 45 m in length, such doors may be of the hinged type, which shall be capable of being operated locally from each side of the door and shall normally be kept closed at sea. A notice shall be attached to the door on each side to state that the door shall be kept closed at sea.

(3) In vessels of 45 m in length and over, watertight doors shall be of the sliding type in:

(a) spaces where it is intended to open them at sea and if located with their sills below the deepest operating waterline, unless the Administration considers it to be impracticable or unnecessary taking into account the type and operation of the vessels; and

(b) the lower part of a machinery space where there is access from it to a shaft tunnel.

Otherwise watertight doors may be of the hinged type.

(4) Sliding watertight doors shall be capable of being operated when the vessel is listed up to 15° either way.

(5) Sliding watertight doors whether manually operated or otherwise shall be capable of being operated locally from each side of the door; in vessels of 45 m in length and over, these doors shall also be capable of being operated by remote control from an accessible position above the working deck except when the doors are fitted in crew accommodation spaces.

(6) Means shall be provided at remote operating positions to indicate when a sliding door is open or closed.

Regulation 3
Hull integrity

(1) External openings shall be capable of being closed so as to prevent water from entering the vessel. Deck openings which may be open during fishing operations shall normally be arranged near to the vessel's centreline. However, the Administration may approve different arrangements if satisfied that the safety of the vessel will not be impaired.

(2) Fish flaps on stern trawlers shall be power-operated and capable of being controlled from any position which provides an unobstructed view of the operation of the flaps.

Regulation 4
Weathertight doors

(1) All access openings in bulkheads of enclosed superstructures and other outer structures through which water could enter and endanger the vessel, shall be fitted with doors permanently attached to the bulkhead, framed and stiffened so that the whole structure is of equivalent strength to the unpierced structure, and weathertight when closed. The means for securing these doors weathertight shall consist of gaskets and clamping devices or other equivalent means and shall be permanently attached to the bulkhead or to the doors themselves, and shall be so arranged that they can be operated from each side of the bulkhead. The Administration may, without prejudice to the safety of the crew, permit the doors to be opened from one side only for freezer rooms, provided that a suitable alarm device is fitted to prevent persons being trapped in those rooms.

(2) The height above deck of sills in those doorways, in companionways, erections and machinery casings which give direct access to parts of the deck exposed to the weather and sea shall be at least 600 mm on the working deck and at least 300 mm on the superstructure deck. Where operating experience has shown justification and on approval of the Administration, these heights, except in the doorways giving direct access to machinery spaces, may be reduced to not less than 380 mm and 150 mm respectively.

Regulation 5
Hatchways closed by wood covers

(1) The height above deck of hatchway coamings shall be at least 600 mm on exposed parts of the working deck and at least 300 mm on the superstructure deck.

(2) The finished thickness of wood hatchway covers shall include an allowance for abrasion due to rough handling. In any case, the finished thickness of these covers shall be at least 4 mm for each 100 mm of unsupported span subject to a minimum of 40 mm and the width of their bearing surfaces shall be at least 65 mm.

(3) Arrangements for securing wood hatchway covers weathertight shall be provided to the satisfaction of the Administration.

Regulation 6
Hatchways closed by covers other than wood

(1) The height above deck of hatchway coamings shall be as specified in regulation 5(1). Where operating experience has shown justification, and on the approval by the Administration, the height of these coamings may be reduced, or the coamings omitted entirely, provided that the safety of vessels is not thereby impaired. In this case, the hatchway openings shall be kept as small as practicable and the covers be permanently attached by hinges or equivalent means and be capable of being rapidly closed and battened down, or by equally effective arrangements to the satisfaction of the Administration.

(2) For the purpose of strength calculations, it shall be assumed that hatchway covers are subjected to the weight of cargo intended to be carried on them or to the following static loads, whichever is the greater:

(a) 10 kN/m^2 for vessels of 24 m in length;

(b) 17 kN/m^2 for vessels of 100 m in length and over.

For intermediate lengths the load values shall be determined by linear interpolation. The Administration may reduce the loads to not less than 75% of the above values for covers to hatchways situated on the superstructure deck in a position abaft a point located 0.25L from the forward perpendicular.

(3) Where covers are made of mild steel, the maximum stress calculated according to paragraph (2) multiplied by 4.25 shall not exceed the minimum ultimate strength of the material. Under these loads the deflections shall not be more than 0.0028 times the span.

(4) Covers made of materials other than mild steel shall be at least of equivalent strength to those made of mild steel, and their construction shall be of sufficient stiffness ensuring weathertightness under the loads specified in paragraph (2).

(5) Covers shall be fitted with clamping devices and gaskets sufficient to ensure weathertightness, or other equivalent arrangements to the satisfaction of the Administration.

Regulation 7
Machinery space openings

(1) Machinery space openings shall be framed and enclosed by casings of a strength equivalent to the adjacent superstructure. External access openings therein shall be fitted with doors complying with the requirements of regulation 4.

(2) Openings other than access openings shall be fitted with covers of equivalent strength to the unpierced structure, permanently attached thereto and capable of being closed weathertight.

Regulation 8
Other deck openings

(1) Where it is essential for fishing operations, flush deck scuttles of the screw, bayonet or equivalent type and manholes may be fitted provided these are capable of being closed watertight and such devices shall be permanently attached to the adjacent structure. Having regard to the size and disposition of the openings and the design of the closing devices, metal-to-metal closures may be fitted if the Administration is satisfied that they are effectively watertight.

(2) Openings other than hatchways, machinery space openings, manholes and flush scuttles in the working or superstructure deck shall be protected by enclosed structures fitted with weathertight doors or their equivalent. Companionways shall be situated as close as practicable to the centreline of the vessel.

Regulation 9
Ventilators

(1) In vessels of 45 m in length and over, the height above deck of ventilator coamings, other than machinery space ventilator coamings, shall be at least 900 mm on the working deck and at least 760 mm on the superstructure deck. In vessels of less than 45 m in length, the height of these coamings shall be 760 mm and 450 mm respectively. The height above deck of machinery space ventilator openings shall be to the satisfaction of the Administration.

(2) Coamings of ventilators shall be of equivalent strength to the adjacent structure and capable of being closed weathertight by closing appliances permanently attached to the ventilator or adjacent structure. Where the coaming of any ventilator exceeds 900 mm in height, it shall be specially supported.

(3) Closing appliances in vessels of 45 m in length and over need not be fitted to ventilators the coamings of which extend to more than 4.5 m above the working deck or more than 2.3 m above the superstructure deck unless specifically required by the Administration. In vessels of less than 45 m in length, closing appliances need not be fitted to ventilators the coamings of which extend to more than 3.4 m above the working deck or more than 1.7 m above the superstructure deck. If the Administration is satisfied that it is unlikely that water will enter the vessel through machinery space ventilators, closing appliances to such ventilators may be omitted.

Regulation 10
Air pipes

(1) Where air pipes to tanks and void spaces below deck extend above the working or the superstructure decks, the exposed parts of the pipes shall be of strength equivalent to the adjacent structures and fitted with appropriate protection. Openings of air pipes shall be provided with means of closing, permanently attached to the pipe or adjacent structure.

(2) The height of air pipes above deck to the point where water may have access below shall be at least 760 mm on the working deck and at least 450 mm on the superstructure deck. The Administration may accept reduction of the height of an air pipe to avoid interference with the fishing operations.

Regulation 11
Sounding devices

(1) Sounding devices, to the satisfaction of the Administration, shall be fitted:

(a) to the bilges of those compartments which are not readily accessible at all times during the voyage; and

(b) to all tanks and cofferdams.

(2) Where sounding pipes are fitted, their upper ends shall be extended to a readily accessible position and, where practicable, above the working deck. Their openings shall be provided with permanently attached means of closing. Sounding pipes which are not extended above the working deck shall be fitted with automatic self-closing devices.

Regulation 12
Sidescuttles and windows

(1) Sidescuttles to spaces below the working deck and to spaces within the enclosed structures on that deck shall be fitted with hinged deadlights capable of being closed watertight.

(2) No sidescuttle shall be fitted in such a position that its sill is less than 500 mm above the deepest operating waterline.

(3) Sidescuttles fitted less than 1,000 mm above the deepest operating waterline shall be of the fixed type.

(4) Sidescuttles, together with their glasses and deadlights shall be of an approved construction. Those prone to be damaged by fishing gear shall be suitably protected.

(5) Toughened safety glass or its equivalent shall be used for the wheelhouse windows.

(6) The Administration may accept sidescuttles and windows without deadlights in side and aft bulkheads of deckhouses located on or above the working deck, if satisfied that the safety of the vessel will not be impaired.

Regulation 13
Inlets and discharges

(1) Discharges led through the shell either from spaces below the working deck or from within enclosed superstructures or deckhouses on the working deck fitted with doors complying with the requirements of regulation 4 shall be fitted with accessible means for preventing water from passing inboard. Normally each separate discharge shall have an automatic non-return valve with a positive means of closing it from an accessible position. Such a valve is not required if the Administration considers that the entry of water into the vessel through the opening is not likely to lead to dangerous flooding and that the thickness of the piping is sufficient. The means for operating the positive action valve shall be provided with an indicator showing whether the valve is open or closed.

(2) In manned machinery spaces main and auxiliary sea inlets and discharges essential for the operation of machinery may be controlled locally. The controls shall be accessible and shall be provided with indicators showing whether the valves are open or closed.

(3) Fittings attached to the shell and the valves required by this regulation shall be of steel, bronze or other approved ductile material. All pipes between the shell and the valves shall be of steel, except that in spaces other than machinery spaces of vessels constructed of material other than steel the Administration may approve the use of other materials.

Regulation 14
Freeing ports

(1) Where bulwarks on weather parts of the working deck form wells, the minimum freeing port area (A) in square metres on each side of the vessel for each well on the working deck shall be determined in relation to the length (*l*) and height of bulwark in the well as follows:

(a) $A = 0.07\ l$ (*l* need not be taken as greater than 0.7L).

(b) (i) Where the bulwark is more than 1,200 mm in average height, the required area shall be increased by 0.004 m^2 per metre of length of well for each 100 mm difference in height.

(ii) Where the bulwark is less than 900 mm in average height, the required area may be decreased by 0.004 m^2 per metre of length of well for each 100 mm difference in height.

(2) The freeing port area calculated according to paragraph (1) shall be increased where the Administration considers that the vessel's sheer is not sufficient to ensure that the deck is rapidly and effectively freed of water.

(3) Subject to the approval of the Administration the minimum freeing port area for each well on the superstructure deck shall be not less than one half the area (A) given in paragraph (1).

(4) Freeing ports shall be so arranged along the length of bulwarks as to ensure that the deck is freed of water most rapidly and effectively. Lower edges of freeing ports shall be as near the deck as practicable.

(5) Poundboards and means for stowage of the fishing gear shall be arranged so that the effectiveness of freeing ports will not be impaired. Poundboards shall be so constructed that they can be locked in position when in use and shall not hamper the discharge of shipped water.

(6) Freeing ports over 300 mm in depth shall be fitted with bars spaced not more than 230 mm nor less than 150 mm apart or provided with other suitable protective arrangements. Freeing port covers, if fitted, shall be of approved construction. If devices are considered necessary for locking freeing port covers during fishing operations, they shall be to the satisfaction of the Administration and easily operable from a readily accessible position.

(7) In vessels intended to operate in areas subject to icing, covers and protective arrangements for freeing ports shall be capable of being easily removed to restrict ice accretion. The size of openings and means provided for removal of these protective arrangements shall be to the satisfaction of the Administration.

Regulation 15
Anchor and mooring equipment

Anchor equipment designed for quick and safe operation shall be provided which shall consist of anchoring equipment, anchor chains or wire ropes, stoppers and a windlass or other arrangements for dropping and hoisting the anchor and for holding the vessel at anchor in all foreseeable service conditions. Vessels shall also be provided with adequate mooring equipment for safe mooring in all operating conditions. Anchor and mooring equipment shall be to the satisfaction of the Administration.[3]

CHAPTER III
STABILITY AND ASSOCIATED SEAWORTHINESS

Regulation 1
General

Vessels shall be so designed and constructed that the requirements of this chapter will be satisfied in the operating conditions referred to in regulation 7. Calculations of the righting lever curves shall be to the satisfaction of the Administration.[4]

Regulation 2
Stability criteria

(1) The following minimum stability criteria shall be met unless the Administration is satisfied that operating experience justifies departures therefrom:

(a) the area under the righting lever curve (GZ curve) shall not be less than 0.055 m-rad up to 30° angle of heel and not less than 0.09 m-rad up to 40° or the angle of flooding Θ_f if this angle is less than 40°. Additionally, the area under the righting lever curve (GZ curve) between the angles of heel of 30° and 40° or between 30° and Θ_f, if this angle is less than 40° shall not be less than 0.03 m-rad. Θ_f is the angle of heel at which openings in the hull, superstructure or deckhouses which cannot rapidly be closed weathertight commence to immerse. In applying this criterion, small openings through which progressive flooding cannot take place need not be considered as open;

(b) the righting level GZ shall be at least 200 mm at an angle of heel equal to or greater than 30°;

(c) the maximum righting lever GZ_{max} shall occur at an angle of heel preferably exceeding 30° but not less than 25°;

(d) the initial metacentric height GM shall not be less than 350 mm for single deck vessels. In vessels with complete superstructure or vessels of 70 m in length and over, the metacentric height may be reduced to the satisfaction of the Administration but in no case shall be less than 150 mm.

---

3 See annex II, *Recommended practice for anchor and mooring equipment*, of part B of the *Code of Safety for Fishermen and Fishing Vessels*, 2005.

4 See part B, chapter 2, section 2.1 of the *International Code on Intact Stability*, 2008, adopted by the Maritime Safety Committee of the Organization by resolution MSC.267(85) and the *Code of practice concerning the accuracy of stability information for fishing vessels*, adopted by the Organization by resolution A.267(VIII).

(2) Where arrangements other than bilge keels are provided to limit the angles of roll, the Administration shall be satisfied that the stability criteria given in paragraph (1) are maintained in all operating conditions.

(3) Where ballast is provided to ensure compliance with paragraph (1), its nature and arrangement shall be to the satisfaction of the Administration.

Regulation 3
Flooding of fish-holds

The angle of heel at which progressive flooding of fish-holds could occur through hatches which remain open during fishing operations and which cannot rapidly be closed shall be at least 20° unless the stability criteria of regulation 2(1) can be satisfied with the respective fish-holds partially or completely flooded.

Regulation 4
Particular fishing methods

Vessels engaged in particular fishing methods where additional external forces are imposed on the vessel during fishing operations, shall meet the stability criteria of regulation 2(1) increased, if necessary, to the satisfaction of the Administration.

Regulation 5
Severe wind and rolling

Vessels shall be able to withstand, to the satisfaction of the Administration, the effect of severe wind and rolling in associated sea conditions taking account of the seasonal weather conditions, the sea states in which the vessel will operate, the type of vessel and its mode of operation.[5]

Regulation 6
Water on deck

Vessels shall be able to withstand, to the satisfaction of the Administration, the effect of water on deck, taking account of the seasonal weather conditions, the sea states in which the vessel will operate, the type of vessel and its mode of operation.[6]

Regulation 7
Operating conditions

(1) The number and type of operating conditions to be considered shall be to the satisfaction of the Administration and shall include the following, as appropriate:

(a) departure for the fishing grounds with full fuel, stores, ice, fishing gear, etc.;

(b) departure from the fishing grounds with full catch;

(c) arrival at home port with full catch and 10% stores, fuel, etc.; and

---

5 See part B, chapter 2, paragraph 2.1.4 of the *International Code on Intact Stability*, 2008, adopted by the Maritime Safety Committee of the Organization by resolution MSC.267(85).

6 See the *Guidance on a method of calculation of the effect of water on deck*, contained in recommendation 1 of attachment 3 to the *Final Act of the International Conference on Safety of Fishing Vessels*, 1993, as reproduced in Attachment 3 to this consolidated text.

(d) arrival at home port with 10% stores, fuel, etc. and a minimum catch, which shall normally be 20% of full catch but may be up to 40%, provided the Administration is satisfied that operating patterns justify such a value.

(2) In addition to the specific operating conditions given in paragraph (1) the Administration shall also be satisfied that the minimum stability criteria given in regulation 2 are met under all other actual operating conditions including those which produce the lowest values of the stability parameters contained in these criteria. The Administration shall also be satisfied that those special conditions associated with a change in the vessel's mode or areas of operation which affect the stability considerations of this chapter are taken into account.

(3) Concerning the conditions referred to in paragraph (1), the calculations shall include the following:

(a) allowance for the weight of the wet fishing nets and tackle, etc. on the deck;

(b) allowance for ice accretion, if anticipated, in accordance with the provisions of regulation 8;

(c) homogeneous distribution of the catch, unless this is inconsistent with practice;

(d) catch on deck, if anticipated, in operating conditions referred to in paragraph (1)(b) and (c) and paragraph (2);

(e) water ballast if carried either in tanks which are especially provided for this purpose or in other tanks also equipped for carrying water ballast; and

(f) allowance for the free surface effect of liquids and, if applicable, catch carried.

Regulation 8
Ice accretion

(1) For vessels operating in areas where ice accretion is likely to occur the following icing allowance shall be made in the stability calculations:[7]

(a) 30 kg/m^2 on exposed weather decks and gangways;

(b) 7.5 kg/m^2 for projected lateral area of each side of the vessel above the water plane;

(c) the projected lateral area of discontinuous surfaces of rail, spars (except masts) and rigging of vessels having no sails and the projected lateral area of other small objects shall be computed by increasing the total projected area of continuous surfaces by 5% and the static moments of this area by 10%.

---

[7] For sea areas, where ice accretion may occur and modifications of the icing allowance are suggested, see the *Guidance relating to ice accretion*, contained in recommendation 2 of attachment 3 to the *Final Act of the International Conference on Safety of Fishing Vessels*, 1993, as reproduced in attachment 3 to this consolidated text, and part B, chapter 6, section 6.3 of, and annex 2 to, the *International Code on Intact Stability*, 2008, adopted by the Maritime Safety Committee of the Organization by resolution MSC.267(85).

(2) Vessels intended for operation in areas where ice accretion is known to occur shall be:

(a) designed to minimize the accretion of ice; and

(b) equipped with such means for removing ice as the Administration may require.

Regulation 9
Inclining test

(1) Every vessel shall undergo an inclining test upon its completion and the actual displacement and position of the centre of gravity shall be determined for the lightship condition.

(2) Where alterations are made to a vessel affecting its lightship condition and the position of the centre of gravity, the vessel shall, if the Administration considers this necessary, be re-inclined and the stability information revised.

(3) The Administration may allow the inclining test of an individual vessel to be dispensed with, provided basic stability data are available from the inclining test of a sister ship and it is shown, to the satisfaction of the Administration, that reliable stability information for the exempted vessel can be obtained from such basic data.

Regulation 10
Stability information

(1) Suitable stability information shall be supplied to enable the skipper to assess with ease and certainty the stability of the vessel under various operating conditions.[8] Such information shall include specific instructions to the skipper warning him of those operating conditions which could adversely affect either the stability or the trim of the vessel. A copy of the stability information shall be submitted to the Administration for approval.[9]

(2) The approved stability information shall be kept on board, readily accessible at all times and inspected at the periodical surveys of the vessel to ensure that it has been approved for the actual operating conditions.

(3) Where alterations are made to a vessel affecting its stability, revised stability calculations shall be prepared and submitted to the Administration for approval. If the Administration decides that the stability information must be revised, the new information shall be supplied to the skipper and the superseded information removed.

---

8 See the *Guidance on stability information*, contained in recommendation 3 of attachment 3 to the *Final Act of the International Conference on Safety of Fishing Vessels*, 1993, as reproduced in attachment 3 to this consolidated text, and part B, chapter 6, section 6.3 of, and annex 2 to, the *International Code on Intact Stability*, 2008, adopted by the Maritime Safety Committee of the Organization by resolution MSC.267(85).

9 See the *Code of practice concerning the accuracy of stability information for fishing vessels*, adopted by the Organization by resolution A.267(VIII).

Regulation 11
Portable fish-hold divisions

The catch shall be properly secured against shifting which could cause dangerous trim or heel of the vessel. The scantlings of portable fish-hold divisions, if fitted, shall be to the satisfaction of the Administration.[10]

Regulation 12
Bow height

The bow height shall be sufficient, to the satisfaction of the Administration, to prevent the excessive shipping of water and shall be determined taking account of the seasonal weather conditions, the sea states in which the vessel will operate, the type of vessel and its mode of operation.[11]

Regulation 13
Maximum permissible operating draught

A maximum permissible operating draught shall be approved by the Administration and shall be such that, in the associated operating condition, the stability criteria of this chapter and the requirements of chapters II and VI, as appropriate, are satisfied.

Regulation 14
Subdivision and damage stability

Vessels of 100 m in length and over, where the total number of persons carried is 100 or more, shall be capable, to the satisfaction of the Administration, of remaining afloat with positive stability, after the flooding of any one compartment assumed damaged, having regard to the type of vessel, the intended service and area of operation.[12]

CHAPTER IV
MACHINERY AND ELECTRICAL INSTALLATIONS AND PERIODICALLY UNATTENDED MACHINERY SPACES

PART A
GENERAL

Regulation 1
Application

The provisions of this chapter shall apply to vessels of 45 m in length and over.

---

10 See appendix V, *Recommended practice on portable fish hold divisions*, of the *Recommendation on intact stability of fishing vessels*, adopted by the Organization by resolution A.168(ES.IV), as amended by resolution A.268(VIII).

11 See the *Guidance on a method of calculation of bow height*, contained in recommendation 4 of attachment 3 to the *Final Act of the International Conference on Safety of Fishing Vessels*, 1993, as reproduced in attachment 3 to this consolidated text.

12 See the *Guidance on subdivision and damage stability calculations*, contained in recommendation 5 of attachment 3 to the *Final Act of the International Conference on Safety of Fishing Vessels*, 1993.

Regulation 2
Definitions

(1) *Main steering gear* is the machinery, the steering gear power units, if any, and ancillary equipment and the means of applying torque to the rudder stock (e.g. tiller or quadrant) necessary for effecting movement of the rudder for the purpose of steering the vessel under normal service conditions.

(2) *Auxiliary means of activating the rudder* is the equipment which is provided for effecting movement of the rudder for the purpose of steering the vessel in the event of failure of the main steering gear.

(3) *Steering gear power unit* means, in the case of:

(a) electric steering gear, an electric motor and its associated electrical equipment;

(b) electro-hydraulic steering gear, an electric motor and its associated electrical equipment and connected pump; and

(c) other hydraulic steering gear, a driving engine and connected pump.

(4) *Maximum ahead service speed* is the greatest speed which the vessel is designed to maintain in service at sea at its maximum permissible operating draught.

(5) *Maximum astern speed* is the speed which it is estimated the vessel can attain at the designed maximum astern power at its maximum permissible operating draught.

(6) *Fuel oil unit* is the equipment used for the preparation of fuel oil for delivery to an oil-fired boiler, or equipment used for the preparation of oil for delivery to an internal combustion engine, and includes any oil pressure pumps, filters and heaters dealing with oil at a pressure greater than 0.18 N/mm^2.

(7) *Normal operational and habitable conditions* means conditions under which the vessel as a whole, its machinery services, means of main and auxiliary propulsion, steering gear and associated equipment, aids to safe navigation and to limit the risks of fire and flooding, internal and external means of communicating and signalling, means of escape and winches for rescue boats, are in proper working order and the minimum comfortable conditions of habitability are satisfactory.

(8) *Dead ship condition* is the condition under which the main propulsion plant, boilers and auxiliaries are not in operation due to the absence of power.

(9) *Main switchboard* is a switchboard directly supplied by the main source of electrical power and intended to distribute electrical energy.

(10) *Periodically unattended machinery spaces* means those spaces containing main propulsion and associated machinery and all sources of main electrical supply which are not at all times manned under all operating conditions, including manoeuvring.

Regulation 3
General

Machinery installations

(1) Main propulsion, control, steam pipe, fuel oil, compressed air, electrical and refrigeration systems; auxiliary machinery; boilers and other pressure vessels; piping and pumping arrangements; steering equipment and gears, shafts and couplings for power transmission shall be designed, constructed, tested, installed and serviced to the satisfaction of the Administration. This machinery and equipment, as well as lifting gear, winches, fish handling and fish processing equipment shall be protected so as to reduce to a minimum any danger to persons on board. Special attention shall be paid to moving parts, hot surfaces and other dangers.

(2) Machinery spaces shall be so designed as to provide safe and free access to all machinery and its controls as well as to any other parts which may require servicing. Such spaces shall be adequately ventilated.

(3) (a) Means shall be provided whereby the operational capability of the propulsion machinery can be sustained or restored even though one of the essential auxiliaries becomes inoperative. Special consideration shall be given to the functioning of:

(i) the arrangements which supply fuel oil pressure for main propulsion machinery;

(ii) the normal sources of lubricating oil pressure;

(iii) the hydraulic, pneumatic and electrical means for the control of main propulsion machinery including controllable pitch propellers;

(iv) the sources of water pressure for main propulsion cooling systems; and

(v) an air compressor and an air receiver for starting or control purposes,

provided that the Administration may, having regard to overall safety considerations, accept a partial reduction in capability in lieu of full normal operation.

(b) Means shall be provided whereby the machinery can be brought into operation from the dead ship condition without external aid.

(4) Main propulsion machinery and all auxiliary machinery essential to the propulsion and the safety of the vessel shall, as fitted, be capable of operating whether the vessel is upright or listed up to 15° either way under static conditions and up to 22.5° either way under dynamic conditions, i.e. when rolling either way and simultaneously pitching (inclined dynamically) up to 7.5° by bow or stern. The Administration may permit deviation from these angles, taking into consideration the type, size and service conditions of the vessel.

(5) Special consideration shall be given to the design, construction and installation of propulsion machinery systems so that any mode of their vibrations shall not cause undue stresses in such machinery systems in the normal operating ranges.

Electrical installations

(6) The design and construction of electrical installations shall be such as to provide:

(a) the services necessary to maintain the vessel in normal operational and habitable conditions without having recourse to an emergency source of power;

(b) the services essential to safety when failure of the main source of electrical power occurs; and

(c) protection of the crew and vessel from electrical hazards.

(7) The Administration shall be satisfied that regulations 16 to 18 are uniformly implemented and applied.[13]

Periodically unattended machinery spaces

(8) Regulations 19 to 24 shall apply, in addition to regulations 3 to 18 and V/1 to V/44, to vessels with periodically unattended machinery spaces.

(9) Measures shall be taken, to the satisfaction of the Administration, to ensure that all equipment is functioning in a reliable manner in all operating conditions, including manoeuvring, and that arrangements to the satisfaction of the Administration are made for regular inspections and routine tests to ensure continuous reliable operation.

(10) Vessels shall be provided with documentary evidence, to the satisfaction of the Administration, of their fitness to operate with periodically unattended machinery spaces.

PART B
MACHINERY INSTALLATIONS
(See also regulation 3)

Regulation 4
Machinery

(1) Main and auxiliary machinery essential for the propulsion and safety of the vessel shall be provided with effective means of control.

(2) Internal combustion engines of a cylinder diameter greater than 200 mm or a crankcase volume greater than 0.6 m^3 shall be provided with crankcase explosion relief valves of an approved type with sufficient relief area.

(3) Where main or auxiliary machinery including pressure vessels or any parts of such machinery are subject to internal pressure and may be subject to dangerous overpressure, means shall be provided, where applicable, which will protect against such excessive pressure.

(4) All gearing and every shaft and coupling used for transmission of power to machinery essential for the propulsion and safety of the vessel or the safety of persons on board shall be so designed and constructed that it will withstand the maximum working

---

13 See also the recommendations published by the International Electrotechnical Commission and, in particular, Publication 60092, Electrical installations in ships.

stresses to which it may be subjected in all service conditions. Due consideration shall be given to the type of engines by which it is driven or of which it forms part.

(5) Main propulsion machinery and, where applicable, auxiliary machinery shall be provided with automatic shut-off arrangements in the case of failures, such as lubricating oil supply failure, which could lead rapidly to damage, complete breakdown or explosion. An advance alarm shall also be provided so that warning is given before automatic shut-off, but the Administration may permit provisions for overriding automatic shut-off devices. The Administration may also exempt vessels from the provisions of this paragraph, giving consideration to the type of vessel or its specific service.

Regulation 5
Means of going astern[14]

(1) Vessels shall have sufficient power for going astern to secure proper control of the vessel in all normal circumstances.

(2) The ability of the machinery to reverse the direction of thrust of the propeller in sufficient time and so to bring the vessel to rest within a reasonable distance from maximum ahead service speed shall be demonstrated at sea.

Regulation 6
Steam boilers, feed systems and steam piping arrangements

(1) Every steam boiler and every unfired steam generator shall be provided with not less than two safety valves of adequate capacity. Provided that the Administration may, having regard to the output or any other features of any steam boiler or unfired steam generator, permit only one safety valve to be fitted if satisfied that adequate protection against overpressure is thereby provided.

(2) Every oil-fired steam boiler which is intended to operate without manual supervision shall have safety arrangements which shut off the fuel supply and give an alarm in the case of low water level, air supply failure or flame failure.

(3) The Administration shall give special consideration to steam boiler installations to ensure that feed systems, monitoring devices and safety provisions are adequate in all respects to ensure the safety of boilers, steam pressure vessels and steam piping arrangements.

Regulation 7
Communication between the wheelhouse and machinery space

Two separate means of communication between the wheelhouse and the machinery space control platform shall be provided, one of which shall be an engine-room telegraph.

---

[14] See the *Recommendation on the provision and the display of manoeuvring information on board ships*, adopted by the Organization by resolution A.601(15) and *Standards for ship manoeuvrability*, adopted by the Maritime Safety Committee of the Organization by resolution MSC.137(76).

Regulation 8
Wheelhouse control of propulsion machinery

(1) Where remote control of propulsion machinery is provided from the wheelhouse, the following shall apply:

(a) under all operating conditions, including manoeuvring, the speed, direction of thrust and, if applicable, the pitch of the propeller shall be fully controllable from the wheelhouse;

(b) the remote control referred to in subparagraph (a) shall be performed by means of a control device to the satisfaction of the Administration with, where necessary, means of preventing overload of the propulsion machinery;

(c) the main propulsion machinery shall be provided with an emergency stopping device in the wheelhouse and independent from the wheelhouse control system referred to in subparagraph (a);

(d) remote control of the propulsion machinery shall be possible only from one station at a time; at any control station, interlocked control units may be permitted. There shall be at each station an indicator showing which station is in control of the propulsion machinery. The transfer of control between the wheelhouse and machinery spaces shall be possible only in the machinery space or control room;

(e) indicators shall be fitted in the wheelhouse for:

(i) propeller speed and direction in the case of fixed propellers;

(ii) propeller speed and pitch position in the case of controllable pitch propellers; and

(iii) advance alarm as required in regulation 4(5);

(f) it shall be possible to control the propulsion machinery locally even in the case of failure in any part of the remote control system;

(g) unless the Administration considers it impracticable, the design of the remote control system shall be such that, if it fails, an alarm will be given and the pre-set speed and direction of thrust will be maintained until local control is in operation;

(h) special arrangements shall be provided to ensure that automatic starting shall not exhaust the starting possibilities. An alarm shall be provided to indicate low starting air pressure and shall be set at a level which will still permit main engine starting operations.

(2) Where the main propulsion and associated machinery including sources of main electrical supply are provided with various degrees of automatic or remote control and are under continuous manned supervision from a control room, the control room shall be so designed, equipped and installed that the machinery operation will be as safe and effective as if it were under direct supervision.

(3) In general, automatic starting, operational and control systems shall include means for manually overriding the automatic means, even in the case of failure of any part of the automatic and remote control system.

Regulation 9
Air pressure systems

(1) Means shall be provided to prevent excess pressure in any part of compressed air systems and wherever water-jackets or casings of air compressors and coolers might be subjected to dangerous excess pressure due to leakage into them from air pressure parts. Suitable pressure-relief arrangements shall be provided.

(2) The main starting air arrangements for main propulsion internal combustion engines shall be adequately protected against the effects of backfiring and internal explosion in the starting air pipes.

(3) All discharge pipes from starting air compressors shall lead directly to the starting air receivers and all starting pipes from the air receivers to main or auxiliary engines shall be entirely separate from the compressor discharge pipe system.

(4) Provision shall be made to reduce to a minimum the entry of oil into the air pressure systems and to drain these systems.

Regulation 10
Arrangements for fuel oil, lubricating oil and other flammable oils

(1) Fuel oil which has a flashpoint of less than 60°C (closed cup test) as determined by an approved flashpoint apparatus shall not be used as fuel, except in emergency generators, in which case the flashpoint shall be not less than 43°C. Provided that the Administration may permit the general use of fuel oil having a flashpoint of not less than 43°C subject to such additional precautions as it may consider necessary and on condition that the temperature of the space in which such fuel is stored or used shall not rise to within 10°C below the flashpoint of the fuel.

(2) Safe and efficient means of ascertaining the amount of fuel oil contained in any oil tank shall be provided. If sounding pipes are installed, their upper ends shall terminate in safe positions and shall be fitted with suitable means of closure. Gauges made of glass of substantial thickness and protected with a metal case may be used, provided that automatic closing valves are fitted. Other means of ascertaining the amount of fuel oil contained in any fuel oil tank may be permitted providing their failure or overfilling of the tanks will not permit release of fuel.

(3) Provision shall be made to prevent overpressure in any oil tank or in any part of the fuel oil system including the filling pipes. Relief valves and air or overflow pipes shall discharge to a position and in a manner which is safe.

(4) Subject to the satisfaction of the Administration, fuel oil pipes which, if damaged, would allow oil to escape from a storage, settling or daily service tank situated above the double bottom, shall be fitted with a cock or valve on the tank capable of being closed from a safe position outside the space concerned in the event of a fire arising in the space in which such tanks are situated. In the special case of deep tanks situated in any shaft or pipe tunnel or similar space, valves on the tank shall be fitted but control in the event of fire may be effected by means of an additional valve on the pipe or pipes outside the tunnel or similar space. If such additional valve is fitted in the machinery space, it shall be capable of being operated outside this space.

(5) Pumps forming part of the fuel oil system shall be separate from any other system and the connections of any such pumps shall be provided with an efficient relief valve which shall be in closed circuit. Where fuel oil tanks are alternatively used as liquid ballast tanks, proper means shall be provided to isolate the fuel oil and ballast systems.

(6) No oil tank shall be situated where spillage or leakage therefrom can constitute a hazard by falling on heated surfaces. Precautions shall be taken to prevent any oil that may escape under pressure from any pump, filter or heater from coming into contact with heated surfaces.

(7) (a) Fuel oil pipes and their valves and fittings shall be steel or other equivalent material, provided that restricted use of flexible pipes may be permitted in positions where the Administration is satisfied that they are necessary. Such flexible pipes and end attachments shall be of adequate strength and shall, to the satisfaction of the Administration, be constructed of approved fire-resistant materials or have fire-resistant coatings.

(b) Where necessary, fuel oil and lubricating oil pipelines shall be screened or otherwise suitably protected to avoid, as far as practicable, oil spray or oil leakage on heated surfaces or into machinery air intakes. The number of joints in piping systems shall be kept to a minimum.

(8) As far as practicable, fuel oil tanks shall be part of the vessel's structure and shall be located outside machinery spaces of category A. Where fuel oil tanks, other than double bottom tanks, are necessarily located adjacent to or within machinery spaces of category A, at least one of their vertical sides shall be contiguous to the machinery space boundaries, and shall preferably have a common boundary with the double bottom tanks, where fitted, and the area of the tank boundary common with the machinery space shall be kept to a minimum. When such tanks are sited within the boundaries of machinery spaces of category A, they shall not contain fuel oil having a flashpoint of less than 60°C (closed cup test). In general, the use of free-standing fuel oil tanks shall be avoided in fire hazard areas and, particularly, in machinery spaces of category A. When free-standing fuel oil tanks are permitted, they shall be placed in an oil-tight spill tray of ample size having a suitable drain pipe leading to a suitably sized spill oil tank.

(9) The ventilation of machinery spaces shall be sufficient under all normal conditions to prevent accumulation of oil vapour.

(10) The arrangements for the storage, distribution and use of oil employed in pressure lubrication systems shall be to the satisfaction of the Administration. Such arrangements in machinery spaces of category A and, wherever practicable, in other machinery spaces shall at least comply with the provisions of paragraphs (1), (3), (6) and (7) and, in so far as the Administration may consider necessary, with paragraphs (2) and (4). This does not preclude the use of sight flow glasses in lubrication systems provided they are shown by test to have a suitable degree of fire resistance.

(11) The arrangements for the storage, distribution and use of flammable oils employed under pressure in power transmission systems other than oils referred to in paragraph (10) in control and activating systems and heating systems shall be to the satisfaction of the Administration. In locations where means of ignition are present, such arrangements shall at least comply with the provisions of paragraphs (2) and (6) and with the provisions of paragraphs (3) and (7) in respect of strength and construction.

(12) Fuel oil, lubricating oil and other flammable oils shall not be carried in forepeak tanks.

Regulation 11
Bilge pumping arrangements

(1) An efficient bilge pumping plant shall be provided which under all practical conditions shall be capable of pumping from and draining any watertight compartment which is neither a permanent oil tank nor a permanent water tank whether the vessel is upright or listed. Wing suctions shall be provided if necessary for that purpose. Arrangements shall be provided for easy flow of water to the suction pipes. Provided the Administration is satisfied that the safety of the vessel is not impaired the bilge pumping arrangements may be dispensed with in particular compartments.

(2) (a) At least two independently driven power bilge pumps shall be provided, one of which may be driven by the main engine. A ballast pump or other general service pump of sufficient capacity may be used as a power driven bilge pump.

(b) Power bilge pumps shall be capable of giving a speed of water of at least 2 m/s through the main bilge pipe which shall have an internal diameter of at least:

$$d = 25 + 1.68\sqrt{L(B + D)}$$

where: d is the internal diameter in millimetres; and L, B and D are in metres.

However, the actual internal diameter of the bilge main may be rounded off to the nearest standard size acceptable to the Administration.

(c) Each of the bilge pumps provided in accordance with this regulation shall be provided with a direct bilge suction, one of these suctions drawing from the port side of the machinery space and the other from the starboard side, except that in the case of a vessel of less than 75 m in length only one bilge pump need be provided with a direct bilge suction.

(d) No bilge suction shall have an inside diameter of less than 50 mm. The arrangement and sizing of the bilge system shall be such that the full rated capacity of the pump specified above can be applied to each of the watertight compartments located between the collision and afterpeak bulkheads.

(3) A bilge ejector in combination with an independently driven high pressure seawater pump may be installed as a substitute for one independently driven bilge pump required by paragraph (2)(a), provided this arrangement is to the satisfaction of the Administration.

(4) In vessels, where fish handling or processing may cause quantities of water to accumulate in enclosed spaces, adequate drainage shall be provided.

(5) Bilge pipes shall not be led through fuel oil, ballast or double bottom tanks, unless these pipes are of heavy gauge steel construction.

(6) Bilge and ballast pumping systems shall be arranged so as to prevent water passing from the sea or from water ballast spaces into holds or into machinery spaces or from one watertight compartment to another. The bilge connection to any pump which draws from the sea or from water ballast spaces shall be fitted with either a non-return valve or a cock which cannot be opened simultaneously either to the bilges and to the sea or to the bilges and water ballast spaces. Valves in bilge distribution boxes shall be of a non-return type.

(7) Any bilge pipe piercing a collision bulkhead shall be fitted with a positive means of closing at the bulkhead with remote control from the working deck with an indicator showing the position of the valve provided that, if the valve is fitted on the after side of the bulkhead and is readily accessible under all service conditions, the remote control may be dispensed with.

Regulation 12
Protection against noise

Measures shall be taken to reduce the effects of noise upon personnel in machinery spaces to levels satisfactory to the Administration.[15]

Regulation 13
Steering gear

(1) Vessels shall be provided with a main steering gear and an auxiliary means of actuating the rudder to the satisfaction of the Administration. The main steering gear and the auxiliary means of actuating the rudder shall be arranged so that, so far as is reasonable and practicable, a single failure in one of them will not render the other one inoperative.

(2) Where the main steering gear comprises two or more identical power units, an auxiliary steering gear need not be fitted if the main steering gear is capable of operating the rudder as required by paragraph (10) when any one of the units is out of operation. Each of the power units shall be operated from a separate circuit.

(3) The position of the rudder, if power operated, shall be indicated in the wheelhouse. The rudder angle indication for power-operated steering gear shall be independent of the steering gear control system.

(4) In the event of failure of any of the steering gear units, an alarm shall be given in the wheelhouse.

(5) Indicators for running indication of the motors of electric and electrohydraulic steering gear shall be installed in the wheelhouse. Short circuit protection, an overload alarm and a no-voltage alarm shall be provided for these circuits and motors. Protection against excess current, if provided, shall be for not less than twice the full load current of the motor or circuit so protected, and shall be arranged to permit the passage of the appropriate starting currents.

---

15 See the *Code on Noise Levels on Board Ships*, adopted by the Organization by resolution A.468(XII) and the *Code on Noise Levels on Board Ships*, adopted by the Maritime Safety Committee of the Organization by resolution MSC.337(91), as appropriate.

(6) The main steering gear shall be of adequate strength and sufficient to steer the vessel at maximum service speed. The main steering gear and rudder stock shall be so designed that they will not be damaged at maximum speed astern or by manoeuvring during fishing operations.

(7) The main steering gear shall, with the vessel at its maximum permissible operating draught, be capable of putting the rudder over from 35° on one side to 35° on the other side with the vessel running ahead at maximum service speed. The rudder shall be capable of being put over from 35° on either side to 30° on the other side in not more than 28 s, under the same conditions. The main steering gear shall be operated by power where necessary to fulfil these requirements.

(8) The main steering gear power unit shall be arranged to start either by manual means in the wheelhouse or automatically when power is restored after a power failure.

(9) The auxiliary means for actuating the rudder shall be of adequate strength and sufficient to steer the vessel at navigable speed and capable of being brought speedily into action in an emergency.

(10) The auxiliary means for actuating the rudder shall be capable of putting the rudder over from 15° on one side to 15° on the other side in not more than 60 s with the vessel running at one-half of its maximum service speed ahead or 7 knots whichever is the greater. The auxiliary means for actuating the rudder shall be operated by power, where necessary, to fulfil these requirements.

(11) Electric or electrohydraulic steering gear in vessels of 75 m in length and over shall be served by at least two circuits fed from the main switchboard and these circuits shall be as widely separated as possible.

Regulation 14
Engineers' alarm

In vessels of 75 m in length and over, an engineers' alarm shall be provided to be operated from the engine control room or at the manoeuvring platform as appropriate, and shall be clearly audible in the engineers' accommodation.

Regulation 15
Refrigeration systems for the preservation of the catch

(1) Refrigeration systems shall be so designed, constructed, tested and installed as to take account of the safety of the system and also the emission of chlorofluorocarbons (CFCs) or any other ozone-depleting substances from the refrigerant held in quantities or concentrations which are hazardous to human health or to the environment, and shall be to the satisfaction of the Administration.

(2) Refrigerants to be used in refrigeration systems shall be to the satisfaction of the Administration. However, methylchloride or CFCs whose ozone-depleting potential is higher than 5% of CFC-11 shall not be used as refrigerants.

(3) (a) Refrigerating installations shall be adequately protected against vibration, shock, expansion, shrinkage, etc. and shall be provided with an automatic safety control device to prevent a dangerous rise in temperature and pressure.

(b) Refrigeration systems in which toxic or flammable refrigerants are used shall be provided with drainage devices leading to a place where the refrigerant presents no danger to the vessels or to persons on board.

(4) (a) Any space containing refrigerating machinery including condensers and gas tanks utilizing toxic refrigerants shall be separated from any adjacent space by gastight bulkheads. Any space containing the refrigerating machinery including condensers and gas tanks shall be fitted with a leak detection system having an indicator outside the space adjacent to the entrance and shall be provided with an independent ventilation system and a water spray system.

(b) When such containment is not practicable, due to the size of the vessel, the refrigeration system may be installed in the machinery space provided that the quantity of refrigerant used will not cause danger to persons in the machinery space, should all the gas escape, and provided that an alarm is fitted to give warning of a dangerous concentration of gas should any leakage occur in the compartment.

(5) In refrigerating machinery spaces and refrigerating rooms, alarms shall be connected to the wheelhouse or control stations or escape exits to prevent persons being trapped. At least one exit from each such space shall be capable of being opened from the inside. Where practicable, exits from the spaces containing refrigerating machinery using toxic or flammable gas shall not lead directly into any accommodation spaces.

(6) Where any refrigerant harmful to persons is used in a refrigeration system, at least two sets of breathing apparatus shall be provided, one of which shall be placed in a position not likely to become inaccessible in the event of leakage of refrigerant. Breathing apparatus provided as part of the vessel's fire-fighting equipment may be considered as meeting all or part of this provision provided its location meets both purposes. Where self-contained breathing apparatus is used, spare cylinders shall be provided.

(7) Adequate guidance for the safe operation and emergency procedures for the refrigeration system shall be provided by suitable notices displayed on board the vessel.

PART C
ELECTRICAL INSTALLATIONS
(See also regulation 3)

Regulation 16
Main source of electrical power

(1) (a) Where electrical power constitutes the only means of maintaining auxiliary services essential for the propulsion and the safety of the vessel, a main source of electrical power shall be provided which shall include at least two generating sets, one of which may be driven by the main engine. The Administration may accept other arrangements having equivalent electrical capability.

(b) The power of these sets shall be such as to ensure the functioning of the services referred to in regulation 3(6)(a), excluding the power required in fishing activities, processing and preservation of the catch, in the event of any one of these generating sets being stopped.

(c) The arrangement of the vessel's main source of electrical power shall be such that the services referred to in regulation 3(6)(a) can be maintained regardless of the number of revolutions and direction of the main propelling engines or shafting.

(d) Where transformers constitute an essential part of the supply system required by this paragraph, the system shall be so arranged as to ensure continuity of the supply.

(2) (a) The arrangement of the main lighting system shall be such that a fire or other casualty in the space or spaces containing the main source of electrical power, including transformers, if any, will not render the emergency lighting system inoperative.

(b) The arrangement of the emergency lighting system shall be such that a fire or other casualty in the space or spaces containing the emergency source of electrical power, including transformers, if any, will not render the main lighting system inoperative.

Regulation 17
Emergency source of electrical power

(1) A self-contained emergency source of electrical power located, to the satisfaction of the Administration, outside the machinery spaces shall be provided and so arranged as to ensure its functioning in the event of fire or other causes of failure of the main electrical installations.

(2) The emergency source of electrical power shall be capable, having regard to starting current and the transitory nature of certain loads, of serving simultaneously for a period of at least 3 h:

(a) the VHF radio installation required by regulations IX/6(1)(a) and (b) and, if applicable:

(i) the MF radio installation required by regulations IX/8(1)(a) and (b) and regulation IX/9(1)(b) and (c);

(ii) the ship earth station required by regulation IX/9(1)(a); and

(iii) the MF/HF radio installation required by regulations IX/9 (2)(a) and (b) and regulation IX/10(1);

(b) internal communication equipment, fire detecting systems and signals which may be required in an emergency;

(c) the navigation lights, if solely electrical, and the emergency lights:

(i) of launching stations and overside of the vessel;

(ii) in all alleyways, stairways and exits;

(iii) in spaces containing machinery or the emergency source of power;

(iv) in control stations; and

(v) in fish handling and fish processing spaces; and

(d) the operation of the emergency fire pump, if any.

(3) The emergency source of electrical power may be either a generator or an accumulator battery.

(4) (a) Where the emergency source of electrical power is a generator, it shall be provided both with an independent fuel supply and with efficient starting arrangements to the satisfaction of the Administration. Unless a second independent means of starting the emergency generator is provided the single source of stored energy shall be protected to preclude its complete depletion by the automatic starting system.

(b) Where the emergency source of electrical power is an accumulator battery it shall be capable of carrying the emergency load without recharging whilst maintaining the voltage of the battery throughout the discharge period within plus or minus 12% of its nominal voltage. In the event of failure of the main power supply this accumulator battery shall be automatically connected to the emergency switchboard and shall immediately supply at least those services specified in paragraphs (2)(b) and (c). The emergency switchboard shall be provided with an auxiliary switch allowing the battery to be connected manually, in case of failure of the automatic connection system.

(5) The emergency switchboard shall be installed as near as is practicable to the emergency source of power and shall be located in accordance with paragraph (1). Where the emergency source of power is a generator, the emergency switchboard shall be located in the same place unless the operation of the emergency switchboard would thereby be impaired.

(6) An accumulator battery fitted in accordance with this regulation shall be installed in a well-ventilated space which shall not be the space containing the emergency switchboard. An indicator shall be mounted in a suitable place on the main switchboard or in the machinery control room to indicate when the battery constituting the emergency source of power is being discharged. The emergency switchboard is to be supplied in normal operation from the main switchboard by an inter-connector feeder which is to be protected at the main switchboard against overload and short circuit. The arrangement at the emergency switchboard shall be such that, in the event of a failure of the main power supply, an automatic connection of the emergency supply shall be provided. When the system is arranged for feedback operation, the inter-connector feeder shall also be protected at the emergency switchboard at least against short circuit.

(7) The emergency generator and its prime mover and any accumulator battery shall be so arranged as to ensure that they will function at full rated power when the vessel is upright and when rolling up to an angle of 22.5° either way and simultaneously pitching 10° by bow or stern, or is in any combination of angles within those limits.

(8) The emergency source of electrical power and automatic starting equipment shall be so constructed and arranged as to enable adequate testing to be carried out by the crew while the vessel is in operating condition.

Regulation 18
Precautions against shock, fire and other hazards of electrical origin

(1) (a) Exposed permanently fixed metal parts of electrical machines or equipment which are not intended to be "live", but which are liable under fault conditions to become "live" shall be earthed (grounded), unless:

(i) they are supplied at a voltage not exceeding 55 V direct current or 55 V root mean square, between conductors; autotransformers shall not be used for the purpose of achieving this alternative current voltage; or

(ii) they are supplied at a voltage not exceeding 250 V by safety isolating transformers supplying one consuming device only; or

(iii) they are constructed in accordance with the principle of double insulation.

(b) Portable electrical equipment shall operate at a safe voltage, exposed metal parts of such equipment which are not intended to have a voltage but which may have such under fault conditions, shall be earthed. The Administration may require additional precautions for portable electric lamps, tools or similar apparatus for use in confined or exceptionally damp spaces where particular risks due to conductivity may exist.

(c) Electrical apparatus shall be so constructed and so installed that it shall not cause injury when handled or touched in the normal manner.

(2) Main and emergency switchboards shall be so arranged as to give easy access as may be needed to apparatus and equipment, without danger to attendants. The sides and backs and, where necessary, the fronts of switchboards, shall be suitably guarded. Exposed "live" parts having voltages to earth exceeding a voltage to be specified by the Administration shall not be installed on the front of such switchboards. There shall be non-conducting mats or gratings at the front and rear, where necessary.

(3) (a) The hull return system of distribution shall not be used for power, heating or lighting in vessels of 75 m in length and over.

(b) The requirement of subparagraph (a) does not preclude, under conditions approved by the Administration, the use of:

(i) impressed current cathodic protective systems;

(ii) limited and locally earthed systems; or

(iii) insulation level monitoring devices provided the circulation current does not exceed 30 mA under the most unfavourable conditions.

(c) Where the hull return system is used, all final subcircuits (all circuits fitted after the last protective device) shall be two-wire and special precautions shall be taken to the satisfaction of the Administration.

(4) (a) Where a distribution system, whether primary or secondary, for power, heating or lighting, with no connection to earth is used, a device capable of monitoring the insulation level to earth shall be provided.

(b) Where the distribution system is in accordance with subparagraph (a) and a voltage exceeding 55 V direct current or 55 V root mean square, between conductors, is used, a device capable of continuously monitoring the insulation level to earth and of giving an audible or visual indication of abnormally low insulation values shall be provided.

(c) Distribution systems which are supplied at a voltage not exceeding 250 V direct current or 250 V root mean square, between conductors and which are limited in extent, may comply with subparagraph (a), subject to the satisfaction of the Administration.

(5) (a) Except as permitted by the Administration in exceptional circumstances, all metal sheaths and armour of cables shall be electrically continuous and shall be earthed.

(b) All electrical cables shall be at least of a flame-retardant type and shall be so installed as not to impair their original flame-retarding properties. The Administration may permit the use of special types of cables when necessary for particular applications, such as radio frequency cables, which do not comply with the foregoing.

(c) Cables and wiring serving essential or emergency power, lighting, internal communications or signals shall as far as practicable be routed clear of galleys, machinery spaces of category A and other high fire risk areas and laundries, fish handling and fish processing spaces and other spaces where there is a high moisture content. Cables connecting fire pumps to the emergency switchboard shall be of a fire-resistant type where they pass through high fire risk areas. Where practicable, all such cables should be run in such a manner as to preclude their being rendered unserviceable by heating of the bulkheads that may be caused by a fire in an adjacent space.

(d) Where cables which are installed in spaces where the risk of fire or explosion exists in the event of an electrical fault, special precautions against such risks shall be taken to the satisfaction of the Administration.

(e) Wiring shall be supported in such a manner as to avoid chafing or other damage.

(f) Terminations and joints in all conductors shall be made such that they retain the original electrical, mechanical, flame-retarding and, where necessary, fire-resisting properties of the cable.

(g) Cables installed in refrigerated compartments shall be suitable for low temperatures and high humidity.

(6) (a) Circuits shall be protected against short circuit. Circuits shall also be protected against overload, except in accordance with regulation 13 or where the Administration may exceptionally otherwise permit.

(b) The rating or appropriate setting of the overload protective device for each circuit shall be permanently indicated at the location of the protective device.

(7) Lighting fittings shall be arranged to prevent temperature rises which could damage the wiring and to prevent surrounding material from becoming excessively hot.

(8) Lighting or power circuits terminating in a space where the risk of fire or explosion exists shall be provided with isolating switches outside the space.

(9) (a) The housing of an accumulator battery shall be constructed and ventilated to the satisfaction of the Administration.

(b) Electrical and other equipment which may constitute a source of ignition of flammable vapours shall not be permitted in these compartments except as permitted in paragraph (10).

(c) An accumulator battery shall not be located in accommodation spaces unless installed in a hermetically sealed container.

(10) In spaces where flammable mixtures are liable to collect and in any compartment assigned principally to the containment of an accumulator battery, no electrical equipment shall be installed, unless the Administration is satisfied that it is:

(a) essential for operational purposes;

(b) of a type which will not ignite the mixture concerned;

(c) appropriate to the space concerned; and

(d) appropriately certified for safe usage in the dusts, vapours or gases likely to be encountered.

(11) Lightning conductors shall be fitted to all wooden masts or topmasts. In vessels constructed of non-conductive materials, the lightning conductors shall be connected by suitable conductors to a copper plate fixed to the vessel's hull well below the waterline.

PART D
PERIODICALLY UNATTENDED MACHINERY SPACES

(See also regulation 3)

Regulation 19
Fire safety

Fire prevention

(1) Special consideration shall be given to high pressure fuel oil pipes. Where practicable, leakages from such piping systems shall be collected in a suitable drain tank which shall be provided with a high level alarm.

(2) Where daily service fuel oil tanks are filled automatically or by remote control, means shall be provided to prevent overflow spillages. Similar consideration shall be given to other equipment which treats flammable liquids automatically, e.g. fuel oil purifiers, which, whenever practicable, shall be installed in a special space reserved for purifiers and their heaters.

(3) Where fuel oil daily service tanks or settling tanks are fitted with heating arrangements, a high temperature alarm shall be provided if the flashpoint of the fuel oil can be exceeded.

Fire detection

(4) An approved fire detection system based on a self-monitoring principle and including facilities for periodical testing shall be installed in machinery spaces.

(5) The detection system shall initiate both audible and visual alarm in the wheelhouse and in sufficient appropriate spaces to be heard and observed by persons on board, when the vessel is in harbour.

(6) The fire detection system shall be fed automatically from an emergency source of power if the main source of power fails.

(7) Internal combustion engines of 2,500 kW and over shall be provided with crankcase oil mist detectors or engine bearing temperature detectors or equivalent devices.

Fire fighting

(8) A fixed fire-extinguishing system shall be provided to the satisfaction of the Administration, which shall be in compliance with the requirements of regulations V/22 and V/40.

(9) In vessels of 75 m in length and over, provision shall be made for immediate water delivery from the fire main system either by:

(a) remote starting arrangements of one of the main fire pumps in the wheelhouse and at the fire control station, if any; or

(b) permanent pressurization of the fire main system, due regard being paid to the possibility of freezing.[16]

(10) The Administration shall be satisfied with the maintenance of the fire integrity of the machinery spaces, the location and centralization of the fire-extinguishing system controls, the shutdown arrangements referred to in regulation 24, e.g. ventilation, fuel pumps, etc., and may require fire-extinguishing appliances and other fire-fighting equipment and breathing apparatus in addition to the relevant requirements of chapter V.

Regulation 20
Protection against flooding

(1) Bilges in machinery spaces shall be provided with a high level alarm in such a way that the accumulation of liquids is detected at normal angles of trim and heel. The detection system shall initiate an audible and visual alarm in the places where continuous watch is maintained.

---

16 See the *Guidance for precautions against freezing of fire mains*, contained in recommendation 6 of attachment 3 to the *Final Act of the International Conference on Safety of Fishing Vessels*, 1993, as reproduced in attachment 3 to this consolidated text.

(2) The controls of any valve serving a sea inlet, a discharge below the waterline or a bilge injection system shall be so sited as to allow adequate time for operation in case of influx of water to the space.

Regulation 21
Communications

In vessels of 75 m in length and over, one of the two separate means of communication referred to in regulation 7 shall be a reliable vocal communication. An additional reliable means of vocal communication shall be provided between the wheelhouse and the engineers' accommodation.

Regulation 22
Alarm system

(1) An alarm system shall be provided which shall indicate any fault requiring attention.

(2) (a) The alarm system shall be capable of sounding an audible alarm in the machinery space and shall indicate visually each separate alarm function at a suitable position.

(b) The alarm system shall have a connection to the engineers' cabins through a selector switch to ensure connection to one of those cabins and to the engineers' public rooms, if any. The Administration may permit alternative arrangements which provide an equivalent measure of safety.

(c) An engineers' alarm and an alarm to the wheelhouse for persons on watch shall be activated if an alarm function has not received attention within a limited period as specified by the Administration.

(d) Audible and visual alarms shall be activated in the wheelhouse for any situation requiring action by the responsible person on watch or which should be brought to his attention.

(e) The alarm system shall as far as practicable be designed on the fail-safe principle.

(3) The alarm system shall be:

(a) continuously powered with automatic change-over to a stand-by power supply in case of loss of normal power supply; and

(b) activated by failure of the normal power supply.

(4) (a) The alarm system shall be able to indicate at the same time more than one fault and the acceptance of any alarm shall not inhibit another alarm.

(b) Acceptance at the position referred to in paragraph (2)(a) of any alarm condition shall be indicated at the positions where it was shown. Alarms shall be maintained until they are accepted and the visual indications shall remain until the fault has been corrected. All alarms shall automatically reset when the fault has been rectified.

Regulation 23
Special requirements for machinery, boiler and electrical installations

(1) In vessels of 75 m in length and over, the main source of electrical power shall be supplied as follows:

(a) where the electrical power can normally be supplied by one generator, there shall be provided suitable load shedding arrangements to ensure the integrity of supplies to services required for propulsion and steering. To cover the case of loss of the generator in operation, there shall be adequate provisions for automatic starting and connecting to the main switchboard of a stand-by generator of sufficient capacity to permit propulsion and steering and with automatic restarting of the essential auxiliaries including, where necessary, sequential operations. Means may be provided to the satisfaction of the Administration for remote (manual) starting and connection of the stand-by generator to the main switchboard as well as means of repeated remote starting of essential auxiliaries; and

(b) if the electrical power is normally supplied by more than one generating set simultaneously, there shall be provisions, e.g. by load shedding, to ensure that, in case of loss of one of these generating sets, the remaining ones are kept in operation without overload to permit propulsion and steering.

(2) Where required to be duplicated, other auxiliary machinery essential to propulsion shall be fitted with automatic change-over devices allowing transfer to a stand-by machine. An alarm shall be given on automatic change-over.

(3) Automatic control and alarm systems shall be provided as follows:

(a) the control system shall be such that, through the necessary automatic arrangements, the services needed for the operation of the main propulsion machinery and its auxiliaries are ensured;

(b) means shall be provided to keep the starting air pressure at the required level where internal combustion engines are used for main propulsion;

(c) an alarm system complying with regulation 22 shall be provided for all important pressures, temperatures, fluid levels, etc.; and

(d) where appropriate, an adequate central position shall be arranged with the necessary alarm panels and instrumentation indicating any alarmed fault.

Regulation 24
Safety system

A safety system shall be provided so that serious malfunction in machinery or boiler operations, which presents an immediate danger, shall initiate the automatic shutdown of that part of the plant and an alarm shall be given. Shutdown of the propulsion system shall not be automatically activated except in cases which could lead to serious damage, complete breakdown or explosion. Where arrangements for overriding the shutdown of the main propelling machinery are fitted, these shall be such as to preclude inadvertent activation. Visual means shall be provided to show whether or not it has been activated.

CHAPTER V
FIRE PROTECTION, FIRE DETECTION, FIRE EXTINCTION AND FIRE FIGHTING
(See also regulation IV/19)

PART A
GENERAL

Regulation 1
General

(1) Unless expressly provided otherwise, this chapter shall apply to new vessels of 45 m in length and over.

(2) One of the following methods of protection shall be adopted in accommodation and service spaces:

(a) Method IF – The construction of all internal divisional bulkheads of non-combustible "B" or "C" class divisions generally without the installation of a detection or sprinkler system in the accommodation and service spaces; or

(b) Method IIF – The fitting of an automatic sprinkler and fire alarm system for the detection and extinction of fire in all spaces in which fire might be expected to originate, generally with no restrictions on the type of internal divisional bulkheads; or

(c) Method IIIF – The fitting of an automatic fire alarm and detection system in all spaces in which a fire might be expected to originate, generally with no restriction on the type of internal divisional bulkheads, except that in no case shall the area of any accommodation space or spaces bounded by an "A" or "B" class division exceed 50 m². However, the Administration may increase this area for public spaces.

(3) The requirements for use of non-combustible materials in construction and insulation of the boundary bulkheads of machinery spaces, control stations, etc., and the protection of stairway enclosures and corridors shall be common to all three methods.

Regulation 2
Definitions

(1) *Non-combustible material* means a material which neither burns nor gives off flammable vapours in sufficient quantity for self-ignition when heated to approximately 750°C, this being determined to the satisfaction of the Administration by an established test procedure. Any other material is a combustible material.[17]

(2) *A standard fire test* is one in which specimens of the relevant bulkheads or decks are exposed in a test furnace to temperatures corresponding approximately to the standard time-temperature curve. The specimen shall have an exposed surface of not less than 4.65 m^2 and a height (or length of deck) of 2.44 m, resembling as closely as possible the intended construction and including where appropriate at least one joint. The standard time-temperature curve is defined by a smooth curve drawn through the following temperature points measured above the initial furnace temperature:

---

17 See Part 1 – Non-combustibility test, contained in annex 1 of the *International Code for Application of Fire Test Procedures*, 2010, adopted by the Maritime Safety Committee of the Organization by resolution MSC.307(88).

at the end of the first 5 min	556°C
at the end of the first 10 min	659°C
at the end of the first 15 min	718°C
at the end of the first 30 min	821°C
at the end of the first 60 min	925°C

(3) *"A" class divisions* are those divisions formed by bulkheads and decks which comply with the following:

(a) they shall be constructed of steel or other equivalent material;

(b) they shall be suitably stiffened;

(c) they shall be so constructed as to be capable of preventing the passage of smoke and flame to the end of the one-hour standard fire test; and

(d) they shall be insulated with approved non-combustible materials such that the average temperature of the unexposed side will not rise more than 139°C above the original temperature, nor will the temperature, at any one point, including any joint, rise more than 180°C above the original temperature, within the time listed below:

class "A-60"	60 min
class "A-30"	30 min
class "A-15"	15 min
class "A-0"	0 min

The Administration may require a test of a prototype bulkhead or deck to ensure that it meets the above requirements for integrity and temperature rise.[18]

(4) *"B" class divisions* are those divisions formed by bulkheads, decks, ceilings or linings which comply with the following:

(a) they shall be so constructed as to be capable of preventing the passage of flame to the end of the first one-half hour of the standard fire test;

(b) they shall have an insulation value such that the average temperature of the unexposed side will not rise more than 139°C above the original temperature, nor will the temperature at any one point, including any joint, rise more than 225°C above the original temperature, within the time listed below:

class "B-15"	15 min
class "B-0"	0 min; and

(c) they shall be constructed of approved non-combustible materials and all materials entering into the construction and erection of "B" class divisions shall be non-combustible with the exception that combustible veneers may be permitted provided they meet the relevant requirements of this chapter.

---

18 See Part 3 – Test for "A", "B" and "F" class divisions, contained in annex 1 of the *International Code for Application of Fire Test Procedures*, 2010, adopted by the Maritime Safety Committee of the Organization by resolution MSC.307(88).

The Administration may require a test of a prototype division to ensure that it meets the above requirements for integrity and temperature rise.[19]

(5) *"C" class divisions* are those divisions constructed of approved non-combustible materials. They need meet no requirements relative to the passage of smoke and flame nor the limiting of temperature rise. Combustible veneers are permitted provided they meet other requirements of this chapter.

(6) *"F" class divisions* are those divisions formed by bulkheads, decks, ceilings or linings which comply with the following:

(a) they shall be so constructed as to be capable of preventing the passage of flame to the end of the first one-half hour of the standard fire test; and

(b) they shall have an insulation value such that the average temperature of the unexposed side will not rise more than 139°C above the original temperature, nor will the temperature at any one point, including any joint, rise more than 225°C above the original temperature, up to the end of the first one-half hour of the standard fire test.

The Administration may require a test of a prototype division to ensure that it meets the above requirements for integrity and temperature rise.[18]

(7) *Continuous "B" class ceilings or linings* are those "B" class ceilings or linings which terminate only at an "A" or "B" class division.

(8) *Steel or other equivalent material* means steel or any material which, by itself or due to insulation provided, has structural and integrity properties equivalent to steel at the end of the applicable fire exposure to the standard fire test (e.g. aluminium alloy with appropriate insulation).

(9) *Low flame spread* means that the surface thus described will adequately restrict the spread of flame, this being determined to the satisfaction of the Administration by an established test procedure.

(10) *Accommodation spaces* are those spaces used for public spaces, corridors, lavatories, cabins, offices, hospitals, cinemas, games and hobbies rooms, pantries containing no cooking appliances and similar spaces.

(11) *Public spaces* are those portions of the accommodation spaces which are used for halls, dining rooms, lounges, and similar permanently enclosed spaces.

(12) *Service spaces* are those spaces used for galleys, pantries containing cooking appliances, lockers and store-rooms, workshops other than those forming part of the machinery spaces, and similar spaces and trunks to such spaces.

(13) *Control stations* are those spaces in which the vessel's radio or main navigation equipment or the emergency source of power is located, or where the fire recording or fire control equipment is centralized.

---

19 Part 3 – Test for "A", "B" and "F" class divisions, contained in annex 1 of the *International Code for Application of Fire Test Procedures*, 2010, adopted by the Maritime Safety Committee of the Organization by resolution MSC.307(88).

(14) *Machinery spaces of category A* are those spaces which contain internal combustion type machinery used either:

(a) for main propulsion; or

(b) for other purposes where such machinery has in the aggregate a total power output of not less than 750 kW,

or which contain any oil-fired boiler or fuel oil unit.

(15) *Machinery spaces* are those machinery spaces of category A and all other spaces containing propulsion machinery, boilers, fuel oil units, steam and internal combustion engines, generators, steering gear, major electrical machinery, oil filling stations, refrigerating, stabilizing, ventilating and air conditioning machinery and similar spaces, and trunks to such spaces.

PART B
FIRE SAFETY MEASURES IN VESSELS OF 60 METRES IN LENGTH AND OVER

Regulation 3
Structure

(1) The hull, superstructure, structural bulkheads, decks and deckhouses shall be constructed of steel or other equivalent material except as otherwise specified in paragraph (4).

(2) The insulation of aluminium alloy components of "A" or "B" class divisions, except structures which, in the opinion of the Administration, are non-load bearing, shall be such that the temperature of the structural core does not rise more than 200°C above the ambient temperature at any time during the applicable fire exposure to the standard fire test.

(3) Special attention shall be given to the insulation of aluminium alloy components of columns, stanchions and other structural members required to support survival craft stowage, launching and embarkation areas, and "A" and "B" class divisions, to ensure:

(a) that for such members supporting survival craft areas and "A" class divisions the temperature rise limitation specified in paragraph (2) shall apply at the end of one hour; and

(b) that for such members required to support "B" class divisions, the temperature rise limitation specified in paragraph (2) shall apply at the end of one half-hour.

(4) Crowns and casings of machinery spaces of category A shall be of steel construction adequately insulated and any openings therein shall be suitably arranged and protected to prevent the spread of fire.

Regulation 4
Bulkheads within the accommodation and service spaces

(1) Within the accommodation and service spaces, all bulkheads required to be "B" class divisions shall extend from deck to deck and to the shell or other boundaries, unless continuous "B" class ceilings or linings, or both, are fitted on both sides of the bulkheads in which case the bulkhead may terminate at the continuous ceiling or lining.

(2) Method IF. All bulkheads not required by this or other regulations of this part to be "A" or "B" class divisions shall be at least "C" class divisions.

(3) Method IIF. There shall be no restriction on the construction of bulkheads not required by this or other regulations of this part to be "A" or "B" class divisions except in individual cases where "C" class bulkheads are required in accordance with table 1 in regulation 7.

(4) Method IIIF. There shall be no restriction on the construction of bulkheads not required by this or other regulations of this part to be "A" or "B" class divisions. In no case shall the area of any accommodation space or spaces bounded by a continuous "A" or "B" class division exceed 50 m^2, except in individual cases where "C" class bulkheads are required in accordance with table 1 in regulation 7. However, the Administration may increase this area for public spaces.

Regulation 5
Protection of stairways and lift trunks in accommodation spaces, service spaces and control stations

(1) Stairways which penetrate only a single deck shall be protected at least at one level by at least "B-0" class divisions and self-closing doors. Lifts which penetrate only a single deck shall be enclosed by "A-0" class divisions with steel doors at both levels. Stairways and lift trunks which penetrate more than a single deck shall be enclosed by at least "A-0" class divisions and protected by self-closing doors at all levels.

(2) All stairways shall be of steel frame construction except where the Administration permits the use of other equivalent material.

Regulation 6
Doors in fire-resistant divisions

(1) Doors shall have resistance to fire as far as practicable, equivalent to the division in which they are fitted. Doors and door frames in "A" class divisions shall be constructed of steel. Doors in "B" class divisions shall be non-combustible. Doors fitted in boundary bulkheads of machinery spaces of category A shall be self-closing and reasonably gastight. The Administration may permit the use of combustible materials in doors separating cabins from the individual interior sanitary accommodation, such as showers, if constructed according to method IF.

(2) Doors required to be self-closing shall not be fitted with hold-back hooks. However, hold-back arrangements fitted with remote release fittings of the fail-safe type may be used.

(3) Ventilation openings may be permitted in and under the doors in corridor bulkheads, except that such openings shall not be permitted in and under stairway enclosure doors. The openings shall be provided only in the lower half of a door. Where such opening is in or under a door, the total net area of any such opening or openings shall not exceed 0.05 m^2. When such opening is cut in a door, it shall be fitted with a grille made of non-combustible material.

(4) Watertight doors need not be insulated.

Regulation 7
Fire integrity of bulkheads and decks

(1) In addition to the specific provisions for fire integrity of bulkheads and decks required elsewhere in this part, the minimum fire integrity of bulkheads and decks shall be as prescribed in table 1 and table 2 of this regulation.

(2) The following requirements shall govern application of the tables:

(a) tables 1 and 2 shall apply respectively to bulkheads and decks separating adjacent spaces; and

(b) for determining the appropriate fire integrity standards to be applied to divisions between adjacent spaces, such spaces are classified according to their fire risk as follows:

(i) Control stations (1)

Spaces containing emergency sources of power and lighting.
Wheelhouse and chartroom.
Spaces containing the vessel's radio equipment.
Fire-extinguishing rooms, fire-control rooms and fire-recording stations.
Control room for propulsion machinery when located outside the machinery space.
Spaces containing centralized fire alarm equipment.

(ii) Corridors (2)

Corridors and lobbies

(iii) Accommodation spaces (3)

Spaces as defined in regulations 2(10) and (11) excluding corridors.

(iv) Stairways (4)

Interior stairways, lifts and escalators other than those wholly contained within the machinery spaces and enclosures thereto. In this connection, a stairway which is enclosed only at one level shall be regarded as part of the space from which it is not separated by a fire door.

(v) Service spaces of low fire risk (5)

Lockers and store-rooms having areas of less than 2 m^2, drying rooms and laundries.

(vi) Machinery spaces of category A (6)

Spaces as defined in regulation 2(14).

(vii) Other machinery spaces (7)

Spaces as defined in regulation 2(15) including fishmeal processing spaces, but excluding machinery spaces of category A.

(viii) Cargo spaces (8)

All spaces used for cargo, including cargo oil tanks, and trunkways and hatchways to such spaces.

(ix) Service spaces of high fire risk (9)

Galleys, pantries containing cooking appliances, paint rooms, lamp rooms, lockers and store-rooms having areas of 2 m^2 or more, and workshops other than those forming part of the machinery spaces.

(x) Open decks (10)

Open deck spaces and enclosed promenades, spaces for processing fish in the raw state, fish washing spaces and similar spaces containing no fire risk.

The air spaces outside superstructures and deckhouses.

The title of each category is intended to be typical rather than restrictive. The number in parenthesis following each category refers to the applicable column or row in the tables.

Table 1 – Fire integrity of bulkheads separating adjacent spaces

Spaces	(1)	(2)	(3)	(4)	(5)	(6)	(7)	(8)	(9)	(10)
Control stations (1)	A-0[e]	A-0	A-60	A-0	A-15	A-60	A-15	A-60	A-60	*
Corridors (2)		C	B-0	B-0 A-0[c]	B-0	A-60	A-0	A-0	A-0	*
Accommodation spaces (3)			C[a,b]	B-0 A-0[c]	B-0	A-60	A-0	A-0	A-0	*
Stairways (4)				B-0 A-0[c]	B-0 A-0[c]	A-60	A-0	A-0	A-0	*
Service spaces of low fire risk (5)					C	A-60	A-0	A-0	A-0	*
Machinery spaces of category A (6)						*	A-0	A-0	A-60	*
Other machinery spaces (7)							A-0[d]	A-0	A-0	*
Cargo spaces (8)								*	A-0	*
Service spaces of high fire risk (9)									A-0[d]	*
Open decks (10)										-

Table 2 – Fire integrity of decks separating adjacent spaces

Space above ↓ Space → below	(1)	(2)	(3)	(4)	(5)	(6)	(7)	(8)	(9)	(10)
Control stations (1)	A-0	A-0	A-0	A-0	A-0	A-60	A-0	A-0	A-0	*
Corridors (2)	A-0	*	*	A-0	*	A-60	A-0	A-0	A-0	*
Accommodation spaces (3)	A-60	A-0	*	A-0	*	A-60	A-0	A-0	A-0	*
Stairways (4)	A-0	A-0	A-0	*	A-0	A-60	A-0	A-0	A-0	*
Service spaces of low fire risk (5)	A-15	A-0	A-0	A-0	*	A-60	A-0	A-0	A-0	*
Machinery spaces of category A (6)	A-60	A-60	A-60	A-60	A-60	*	A-60	A-30	A-60	*
Other machinery spaces (7)	A-15	A-0	A-0	A-0	A-0	A-0	*	A-0	A-0	*
Cargo spaces (8)	A-60	A-0	A-0	A-0	A-0	A-0	A-0	*	A-0	*
Service spaces of high fire risk (9)	A-60	A-0	A-0	A-0	A-0	A-0	A-0	A-0	A-0[d]	*
Open decks (10)	*	*	*	*	*	*	*	*	*	–

Notes: To be applied to both tables 1 and 2, as appropriate.

a No special requirements are imposed upon these bulkheads in methods IIF and IIIF fire protection.

b In case of method IIIF "B" class bulkheads of "B-0", rating shall be provided between spaces or groups of spaces of 50 m^2 and over in area.

c For clarification as to which applies see regulations 4 and 5.

d Where spaces are of the same numerical category and superscript [d] appears, a bulkhead or deck of the rating shown in the tables is only required when the adjacent spaces are for a different purpose, e.g. in category (9). A galley next to a galley does not require a bulkhead, but a galley next to a paint room requires an "A-0" bulkhead.

e Bulkheads separating the wheelhouse, chartroom and radio room from each other may be "B-0" rating.

f Fire insulation need not be fitted if the machinery space in category (7), in the opinion of the Administration, has little or no fire risk.

* Where an asterisk appears in the tables, the division is required to be of steel or equivalent material, but is not required to be of "A" class standard.

(3) Continuous "B" class ceilings or linings, in association with the relevant decks or bulkheads, may be accepted as contributing, wholly or in part, to the required insulation and integrity of a division.

(4) Windows and skylights to machinery spaces shall be as follows:

(a) where skylights can be opened, they shall be capable of being closed from outside the space. Skylights containing glass panels shall be fitted with external shutters of steel or other equivalent material permanently attached;

(b) glass or similar materials shall not be fitted in machinery space boundaries. This does not preclude the use of wire-reinforced glass for skylights and glass in control rooms within the machinery spaces; and

(c) in skylights referred to in subparagraph (a) wire-reinforced glass shall be used.

(5) External boundaries which are required by regulation 3(1) to be of steel or equivalent material may be pierced for the fitting of windows and sidescuttles, provided that there is no requirement elsewhere in this part for such boundaries to have "A" class integrity. Similarly, in such boundaries which are not required to have "A" class integrity, doors may be of materials to the satisfaction of the Administration.

Regulation 8
Details of construction

(1) Method IF. In accommodation and service spaces and control stations all linings, draught stops, ceilings and their associated grounds shall be of non-combustible materials.

(2) Methods IIF and IIIF. In corridors and stairway enclosures serving accommodation and service spaces and control stations, ceilings, linings, draught stops and their associated grounds shall be of non-combustible materials.

(3) Methods IF, IIF and IIIF

(a) Except in cargo spaces or refrigerated compartments of service spaces, insulating materials shall be non-combustible. Vapour barriers and adhesives used in conjunction with insulation, as well as the insulation of pipe fittings, for cold service systems need not be of non-combustible material, but they shall be kept to the minimum quantity practicable and their exposed surfaces shall have qualities of resistance to the propagation of flame to the satisfaction of the Administration. In spaces where penetration of oil products is possible, the surface of insulation shall be impervious to oil or oil vapour.

(b) Where non-combustible bulkheads, linings and ceilings are fitted in accommodation and service spaces, they may have a combustible veneer not exceeding 2 mm in thickness within any such space except corridors, stairway enclosures and control stations, where it shall not exceed 1.5 mm in thickness.

(c) Air spaces enclosed behind ceilings, panellings, or linings shall be divided by close-fitting draught stops spaced not more than 14 m apart. In the vertical direction, such spaces, including those behind linings of stairways, trunks, etc., shall be closed at each deck.

Regulation 9
Ventilation systems

(1) (a) Ventilation ducts shall be of non-combustible material. Short ducts, however, not generally exceeding 2 m in length and with a cross section not exceeding 0.02 m^2 need not be non-combustible, subject to the following conditions:

(i) these ducts shall be of a material which, to the satisfaction of the Administration, has a low fire risk;

(ii) they may only be used at the end of the ventilation device; and

(iii) they shall not be situated less than 600 mm, measured along the duct, from an opening in an "A" or "B" class division including continuous "B" class ceilings.

(b) Where the ventilation ducts with a free cross-sectional area exceeding 0.02 m^2 pass through "A" class bulkheads or decks, the openings shall be lined with a steel sheet sleeve unless the ducts passing through the bulkheads or decks are of steel in the vicinity of passage through the deck or bulkhead and comply in that portion of the duct with the following:

(i) for ducts with a free cross-sectional area exceeding 0.02 m^2, the sleeves shall have a thickness of at least 3 mm and a length of at least 900 mm. When passing through bulkheads, this length shall preferably be divided evenly on each side of the bulkhead. Ducts with a free cross-sectional area exceeding 0.02 m^2 shall be provided with fire insulation. The insulation shall have at least the same fire integrity as the bulkhead or deck through which the duct passes. Equivalent penetration protection may be provided to the satisfaction of the Administration; and

(ii) ducts with a free cross-sectional area exceeding 0.075 m^2 shall be fitted with fire dampers in addition to the requirements of subparagraph (b)(i). The fire damper shall operate automatically, but shall also be capable of being closed manually from both sides of the bulkhead or deck. The damper shall be provided with an indicator which shows whether the damper is open or closed. Fire dampers are not required, however, where ducts pass through spaces surrounded by "A" class divisions, without serving those spaces, provided those ducts have the same fire integrity as the bulkheads which they penetrate.

(c) Ventilation ducts for machinery spaces of category A or galleys shall not in general pass through accommodation spaces, service spaces or control stations. Where the Administration permits this arrangement, the ducts shall be constructed of steel or equivalent material and so arranged as to preserve the integrity of the divisions.

(d) Ventilation ducts of accommodation spaces, service spaces or control stations shall not, in general, pass through machinery spaces of category A or through galleys. Where the Administration permits this arrangement, the ducts shall be constructed of steel or equivalent material and so arranged as to preserve the integrity of the divisions.

(e) Where ventilation ducts with a free cross-sectional area exceeding 0.02 m^2 pass through "B" class bulkheads, the openings shall be lined with steel sheet sleeves of at least 900 mm in length, unless the ducts are of steel for this length in way of the bulkheads. When passing through a "B" class bulkhead, this length shall preferably be divided evenly on each side of the bulkhead.

(f) Such measures, as are practicable, shall be taken in respect of control stations outside machinery spaces in order to ensure that ventilation, visibility and freedom from smoke are maintained, so that, in the event of fire, the machinery and equipment contained therein may be supervised and continue to function effectively. Alternative and separate means of air supply shall be provided; air inlets of the two sources of supply shall be so disposed that the risk of both inlets drawing in smoke simultaneously is minimized. At the discretion of the Administration, such requirements need not apply to control stations situated on, and openings on to, an open deck, or where local closing arrangements are equally effective.

(g) Where they pass through accommodation spaces or spaces containing combustible materials, the exhaust ducts from galley ranges shall be constructed of "A" class divisions. Each exhaust duct shall be fitted with:

(i) a grease trap readily removable for cleaning;

(ii) a fire damper located in the lower end of the duct;

(iii) arrangements, operable from within the galley, for shutting off the exhaust fan; and

(iv) fixed means for extinguishing a fire within the duct, except where the Administration considers such fittings impractical in a vessel of less than 75 m in length.

(2) The main inlets and outlets of all ventilation systems shall be capable of being closed from outside the spaces being ventilated. Power ventilation of accommodation spaces, service spaces, control stations and machinery spaces shall be capable of being stopped from an easily accessible position outside the space being served. This position should not be readily cut off in the event of a fire in the spaces served. The means provided for stopping the power ventilation of the machinery spaces shall be entirely separate from the means provided for stopping ventilation of other spaces.

(3) Means shall be provided for closing, from a safe position, the annular spaces around funnels.

(4) Ventilation systems serving machinery spaces shall be independent of systems serving other spaces.

(5) Store-rooms containing appreciable quantities of highly flammable products shall be provided with ventilation arrangements which are separate from other ventilation systems. Ventilation shall be arranged at high and low levels and the inlets and outlets of ventilators shall be positioned in safe areas and fitted with spark arresters.

Regulation 10
Heating installations

(1) Electric radiators shall be fixed in position and so constructed as to reduce fire risks to a minimum. No such radiator shall be fitted with an element so exposed that clothing, curtains or other similar materials can be scorched or set on fire by heat from the element.

(2) Heating by means of open fires shall not be permitted. Heating stoves and other similar appliances shall be firmly secured and adequate protection and insulation against fire shall be provided beneath and around such appliances and in way of their uptakes. Uptakes of stoves which burn solid fuel shall be so arranged and designed as to minimize the possibility of becoming blocked by combustion products and shall have a ready means for cleaning. Dampers for limiting draughts in uptakes shall, when in the closed position, still leave an adequate area open. Spaces in which stoves are installed shall be provided with ventilators of sufficient area to provide adequate combustion-air for the stove. Such ventilators shall have no means of closure and their position shall be such that closing appliances in accordance with regulation II/9 are not required.

(3) Open flame gas appliances, except cooking stoves and water heaters, shall not be permitted. Spaces containing any such stoves or water heaters shall have adequate ventilation to remove fumes and possible gas leakage to a safe place. All pipes conveying gas from container to stove or water heater shall be of steel or other approved material. Automatic safety gas shut-off devices shall be fitted to operate on loss of pressure in the gas main pipe or flame failure on any appliance.

(4) Where gaseous fuel is used for domestic purposes, the arrangements, storage, distribution and use of the fuel shall be to the satisfaction of the Administration and in accordance with regulation 12.

Regulation 11
Miscellaneous items[20]

(1) All exposed surfaces in corridors and stairway enclosures and surfaces including grounds in concealed or inaccessible spaces in accommodation and service spaces and control stations shall have low flame-spread characteristics.[21] Exposed surfaces of ceilings in accommodation and service spaces and control stations shall have low flame-spread characteristics.

(2) Paints, varnishes and other finishes used on exposed interior surfaces shall not be capable of producing excessive quantities of smoke or toxic gases or vapours. The Administration shall be satisfied that they are not of a nature to offer an undue fire hazard.

(3) Primary deck coverings within accommodation and service spaces and control stations, shall be of approved material which will not readily ignite or give rise to toxic or explosive hazards at elevated temperatures.[22]

---

20 See the *Guidance concerning the use of certain plastic materials*, contained in recommendation 7 of attachment 3 to the Final Act of the International Conference on Safety Fishing Vessels 1993, as reproduced in attachment 3 to this consolidated text.

21 See the *Guidelines on the evaluation of fire hazard properties of materials, adopted by the Organization by resolution* A.166(ES.IV) and Part 5 – Test for surface flammability (test for surface materials and primary deck coverings), contained in Annex 1 of the International Code for Application of Fire Test Procedures, 2010 adopted by the Maritime Safety Committee of the Organization by resolution MSC.307(88).

22 See the *Recommendation on Fire test procedures for ignitability of primary deck coverings*, adopted by the Organization by resolution A.687(17).

(4) Where "A" or "B" class divisions are penetrated for the passage of electrical cables, pipes, trunks, ducts, etc., or for the fitting of ventilation terminals, lighting fixtures and similar devices, arrangements shall be made to ensure that the fire integrity of the divisions is not impaired.

(5) (a) In accommodation and service spaces and control stations, pipes penetrating "A" or "B" class divisions shall be of approved materials having regard to the temperature such divisions are required to withstand. Where the Administration permits the conveying of oil and combustible liquids through accommodation and service spaces, the pipes conveying oil or combustible liquids shall be of an approved material having regard to the fire risk.

(b) Materials readily rendered ineffective by heat shall not be used for overboard scuppers, sanitary discharges and other outlets which are close to the waterline and where the failure of the material in the event of fire would give rise to danger of flooding.

(6) Cellulose-nitrate-based film shall not be used in cinematograph installations.

(7) All waste receptacles other than those used in fish processing shall be constructed of non-combustible materials with no openings in the sides or bottom.

(8) Machinery driving fuel oil transfer pumps, fuel oil unit pumps and other similar fuel pumps shall be fitted with remote controls situated outside the space concerned so that they can be stopped in the event of a fire arising in the space in which they are located.

(9) Drip trays shall be fitted, where necessary, to prevent oil leaking into bilges.

(10) Within compartments used for stowage of fish, combustible insulation shall be protected by close-fitting cladding.

Regulation 12
Storage of gas cylinders and dangerous materials

(1) Cylinders for compressed, liquefied or dissolved gases shall be clearly marked by means of prescribed identifying colours, have a clearly legible identification of the name and chemical formula of their contents and be properly secured.

(2) Cylinders containing flammable or other dangerous gases and expended cylinders shall be stored, properly secured on open decks and all valves, pressure regulators and pipes leading from such cylinders shall be protected against damage. Cylinders shall be protected against excessive variations in temperature, direct rays of the sun and accumulation of snow. However, the Administration may permit such cylinders to be stored in compartments complying with the requirements of paragraphs (3) to (5).

(3) Spaces containing highly flammable liquids, such as volatile paints, paraffin, benzole, etc., and, where permitted, liquefied gas, shall have direct access from open decks only. Pressure-adjusting devices and relief valves shall exhaust within the compartment. Where boundary bulkheads of such compartments adjoin other enclosed spaces, they shall be gastight.

(4) Except as necessary for service within the space, electrical wiring and fittings shall not be permitted within compartments used for the storage of highly flammable liquids or liquefied gases. Where such electrical fittings are installed, they shall be to the satisfaction

of the Administration for use in a flammable atmosphere. Sources of heat shall be kept clear of such spaces and "No smoking" and "No naked light" notices shall be displayed in a prominent position.

(5) Separate storage shall be provided for each type of compressed gas. Compartments used for the storage of such gases shall not be used for storage of other combustible products nor for tools or objects not part of the gas distribution system. However, the Administration may relax these requirements considering the characteristics, volume and intended use of such compressed gases.

Regulation 13
Means of escape

(1) Stairways and ladders leading to and from all accommodation spaces and in spaces in which the crew is normally employed, other than machinery spaces, shall be so arranged as to provide ready means of escape to the open deck and, thence, to the survival craft. In particular, in relation to these spaces:

(a) at all levels of accommodation, at least two widely separated means of escape shall be provided which may include the normal means of access from each restricted space or group of spaces;

(b) (i) below the weather deck, the main means of escape shall be a stairway and the second escape may be a trunk or a stairway; and

(ii) above the weather deck, the means of escape shall be stairways or doors to an open deck or a combination thereof;

(c) exceptionally, the Administration may permit only one means of escape, due regard being paid to the nature and location of spaces and to the number of persons who normally might be accommodated or employed there;

(d) a corridor or part of a corridor from which there is only one route of escape, shall not exceed 7 m in length; and

(e) the width and continuity of the means of escape shall be to the satisfaction of the Administration.

(2) Two means of escape shall be provided from every machinery space of category A by one of the following means:

(a) two sets of steel ladders as widely separated as possible leading to doors in the upper part of the space similarly separated and from which access is provided to the open deck. In general, one of these ladders shall provide continuous fire shelter from the lower part of the space to a safe position outside the space. However, the Administration may not require such shelter if, due to special arrangements or dimensions of the machinery space, a safe escape route from the lower part of this space is provided. This shelter shall be of steel, insulated, where necessary, to the satisfaction of the Administration and be provided with a self-closing steel door at the lower end; or

(b) one steel ladder leading to a door in the upper part of the space from which access is provided to the open deck and, additionally, in the lower part of the space and in a position well separated from the ladder referred to, a steel door capable of being operated from each side and which provides access to a safe escape route from the lower part of the space to the open deck.

(3) From machinery spaces other than those of category A, escape routes shall be provided to the satisfaction of the Administration having regard to the nature and location of the space and whether persons are normally employed in that space.

(4) Lifts shall not be considered as forming one of the required means of escape.

Regulation 14
Automatic sprinkler and fire alarm and fire detection systems (Method IIF)

(1) In vessels in which method IIF is adopted, an automatic sprinkler and fire alarm system of an approved type and complying with the requirements of this regulation shall be installed and so arranged as to protect accommodation spaces and service spaces except spaces which afford no substantial fire risks, such as void spaces and sanitary spaces.

(2) (a) The system shall be capable of immediate operation at all times and no action by the crew shall be necessary to set it in operation. It shall be of the wet pipe type, but small exposed sections may be of the dry pipe type where in the opinion of the Administration this is a necessary precaution. Any parts of the system which may be subjected to freezing temperatures in service shall be suitably protected against freezing.[23] It shall be kept charged at the necessary pressure and shall have provision for a continuous supply of water as required in paragraph (6)(b).

(b) Each section of sprinklers shall include means for giving a visible and audible alarm signal automatically at one or more indicating units whenever any sprinkler comes into operation. Such units shall indicate in which section served by the system, fire has occurred and shall be centralized in the wheelhouse and, in addition, visible and audible alarms from the unit shall be placed in a position other than in the wheelhouse, so as to ensure that the indication of fire is immediately received by the crew. Such an alarm system shall be so constructed as to indicate if any fault occurs in the system.

(3) (a) Sprinklers shall be grouped into separate sections, each of which shall contain not more than 200 sprinklers.

(b) Each section of sprinklers shall be capable of being isolated by one stop valve only. The stop valve in each section shall be readily accessible and its location shall be clearly and permanently indicated. Means shall be provided to prevent the operation of the stop valves by any unauthorized person.

(c) A gauge indicating the pressure in the system shall be provided at each section stop valve and at a central station.

---

23 See the *Guidance for precautions against freezing of fire mains*, contained in recommendation 6 of attachment 3 to the *Final Act of the International Conference on Safety of Fishing Vessels*, 1993, as reproduced in attachment 3 to this consolidated text.

(d) The sprinklers shall be resistant to corrosion. In accommodation and service spaces, the sprinklers shall come into operation within the temperature range of 68°C and 79°C, except that in locations such as drying rooms, where high ambient temperatures might be expected, the operating temperature may be increased by not more than 30°C above the maximum deck head temperature.

(e) A list or plan shall be displayed at each indicating unit showing the spaces covered and the location of the zone in respect of each section. Suitable instructions for testing and maintenance shall be available.

(4) Sprinklers shall be placed in an overhead position and spaced in a suitable pattern to maintain an average application rate of not less than 5 $l/m^2/min$ over the nominal area covered by the sprinklers. Alternatively, the Administration may permit the use of sprinklers providing such quantity of water suitably distributed as has been shown to the satisfaction of the Administration to be not less effective.

(5) (a) A pressure tank having a volume equal to at least twice that of the charge of water specified in this subparagraph shall be provided. The tank shall contain a standing charge of fresh water, equivalent to the amount of water which would be discharged in one minute by the pump referred to in paragraph (6)(b), and the arrangements shall provide for maintaining such air pressure in the tank as to ensure that, where the standing charge of fresh water in the tank has been used, the pressure will be not less than the working pressure of the sprinkler, plus the pressure due to a head of water measured from the bottom of the tank to the highest sprinkler in the system. Suitable means of replenishing the air under pressure and of replenishing the fresh water charge in the tank shall be provided. A glass gauge shall be provided to indicate the correct level of the water in the tank.

(b) Means shall be provided to prevent the passage of seawater into the tank.

(6) (a) An independent power pump shall be provided solely for the purpose of continuing automatically the discharge of water from the sprinklers. The pump shall be brought into action automatically by the pressure drop in the system before the standing fresh water charge in the pressure tank is completely exhausted.

(b) The pump and the piping system shall be capable of maintaining the necessary pressure at the level of the highest sprinkler to ensure a continuous output of water sufficient for the simultaneous coverage of the maximum area separated by fire-resisting bulkheads of "A" and "B" class divisions or an area of 280 m^2 whichever is the less at the application rate specified in paragraph (4).

(c) The pump shall have fitted on the delivery side a test valve with a short open-ended discharge pipe. The effective area through the valve and pipe shall be adequate to permit the release of the required pump output while maintaining the pressure in the system specified in paragraph (5)(a).

(d) The sea inlet to the pump shall, wherever possible, be in the space containing the pump and shall be so arranged that, when the vessel is afloat, it will not be necessary to shut off the supply of seawater to the pump for any purpose other than the inspection or repair of the pump.

(7) The sprinkler pump and tank shall be situated in a position reasonably remote from any machinery space of category A and shall not be situated in any space required to be protected by the sprinkler system.

(8) (a) There shall not be less than two sources of power supply for the seawater pump and the automatic fire alarm and fire detection system. If the pump is electrically driven, it shall be connected to the main source of electrical power, which shall be capable of being supplied by at least two generators.

(b) The feeders shall be arranged so as to avoid galleys, machinery spaces and other enclosed spaces of high fire risk except, in so far as it is necessary to reach the appropriate switchboard. One of the sources of power supply for the fire alarm and fire detection system shall be an emergency source. Where one of the sources of power for the pump is an internal combustion-type engine, it shall, in addition to complying with the provisions of paragraph (7), be so situated that a fire in any protected space will not affect the air supply to that engine.

(9) The sprinkler system shall have a connection from the vessel's fire main by way of a lockable screw-down non-return valve at the connection which will prevent a backflow from the sprinkler system to the fire main.

(10) (a) A test valve shall be provided for testing the automatic alarm for each section of sprinklers by a discharge of water equivalent to the operation of one sprinkler. The test valve for each section shall be situated near the stop valve for that section.

(b) Means shall be provided for testing the automatic operation of the pump on reduction of pressure in the system.

(c) Switches shall be provided at one of the indicating positions referred to in paragraph (2)(b) which will enable the alarm and the indicators for each section of sprinklers to be tested.

(11) Spare sprinkler heads shall be provided for each section of sprinklers to the satisfaction of the Administration.

Regulation 15
Automatic fire alarm and fire detection systems (Method IIIF)

(1) In vessels, in which method IIIF is adopted, an automatic fire alarm and fire detection system of an approved type and complying with the requirements of this regulation shall be installed and so arranged as to detect the presence of fire in all accommodation spaces and service spaces except spaces which afford no substantial fire risk, such as void spaces and sanitary spaces.

(2) (a) The system shall be capable of immediate operation at all times and no action of the crew shall be necessary to set it in operation.

(b) Each section of detectors shall include means for giving a visible and audible alarm signal automatically at one or more indicating units whenever any detector comes into operation. Such units shall indicate in which section served by the system a fire has occurred and shall be centralized on the wheelhouse and such other positions as will ensure that any alarm from the system is immediately received by the crew. Additionally,

arrangements shall be provided to ensure that an alarm is sounded on the deck on which the fire has been detected. Such an alarm and detection system shall be so constructed as to indicate if any fault occurs in the system.

(3) Detectors shall be grouped into separate sections, each covering not more than 50 rooms served by such a system and containing not more than 100 detectors. Detectors shall be zoned to indicate on which deck a fire has occurred.

(4) The system shall be operated by an abnormal air temperature, by an abnormal concentration of smoke or by other factors indicative of incipient fire in any one of the spaces to be protected. Systems which are sensitive to air temperature shall not operate at less than 54°C and shall operate at a temperature not greater than 78°C when the temperature increase to those levels is not more than 1°C per minute. At the discretion of the Administration, the permissible temperature of operation may be increased to 30°C above the maximum deckhead temperature in drying rooms and similar places of normally high ambient temperature. Systems which are sensitive to smoke concentration shall operate on the reduction of the intensity of a transmitted light beam by an amount to be determined by the Administration. Other equally effective methods of operation may be accepted at the discretion of the Administration. The detection system shall not be used for any purpose other than fire detection.

(5) The detectors may be arranged to operate the alarm by the opening or closing of contacts or by other appropriate methods. They shall be fitted in an overhead position and shall be suitably protected against impact and physical damage. They shall be suitable for use in a marine atmosphere. They shall be placed in an open position clear of beams and other objects likely to obstruct the flow of hot gases or smoke to the sensitive element. Detectors operated by the closing of contacts shall be of the sealed contact type and the circuit shall be continuously monitored to indicate fault conditions.

(6) At least one detector shall be installed in each space where detection facilities are required and there shall be not less than one detector for each 37 m^2 of deck area approximately. In large spaces the detectors shall be arranged in a regular pattern so that no detector is more than 9 m from another detector or more than 4.5 m from a bulkhead.

(7) There shall be not less than two sources of power supply for the electrical equipment used in the operation of the fire alarm and fire detection system, one of which shall be an emergency source. The supply shall be provided by separate feeders reserved solely for that purpose. Such feeders shall run to a change-over switch situated in the control station for the fire detection system. The wiring system shall be so arranged as to avoid galleys, machinery spaces and other enclosed spaces having a high fire risk, except, in so far as it is necessary, to provide for fire detection in such spaces or to reach the appropriate switchboard.

(8) (a) A list or plan shall be displayed adjacent to each indicating unit showing the spaces covered and the location of the zone in respect of each system. Suitable instructions for testing and maintenance shall be available.

(b) Provision shall be made for testing the correct operation of the detectors and the indicating units by supplying means for applying hot air or smoke at detector positions.

(9) Spare detector heads shall be provided for each section of detectors, to the satisfaction of the Administration.

Regulation 16
Fixed fire-extinguishing arrangements in cargo spaces of high fire risk

Cargo spaces of high fire risk shall be protected by a fixed gas fire-extinguishing system or by a fire-extinguishing system which gives equivalent protection, to the satisfaction of the Administration.

Regulation 17
Fire pumps

(1) At least two fire pumps shall be provided.

(2) If a fire in any one compartment could put all the fire pumps out of action, there shall be an alternative means of providing water for fire fighting. In vessels of 75 m in length and over, this alternative means shall be a fixed emergency fire pump independently driven. This emergency fire pump shall be capable of supplying two jets of water, to the satisfaction of the Administration.

(3) (a) The fire pumps, other than the emergency pump, shall be capable of delivering for fire-fighting purposes a quantity of water at a minimum pressure of 0.25 N/mm^2, with a total capacity (Q) of at least:

$$Q = (0.15\sqrt{(L\,(B + D)} + 2.25)^2 \ m^3/h$$

where L, B and D are in metres.

However, the total required capacity of the fire pumps need not exceed 180 m^3/h.

(b) Each of the required fire pumps other than any emergency pump shall have a capacity of not less than 40% of the total capacity of fire pumps required by subparagraph (a) and shall, in any event, be capable of delivering at least the jets of water required by regulation 19(2)(a). These fire pumps shall be capable of supplying the fire main systems under the required conditions. Where more than two pumps are installed, the capacity of such additional pumps shall be to the satisfaction of the Administration.

(4) (a) Fire pumps shall be independently driven power pumps. Sanitary, ballast, bilge or general service pumps may be accepted as fire pumps, provided that they are not normally used for pumping oil and that, if they are subject to occasional duty for the transfer or pumping of fuel oil, suitable change-over arrangements are fitted.

(b) Relief valves shall be provided in conjunction with all fire pumps if the pumps are capable of developing a pressure exceeding the design pressure of the water service pipes, hydrants and hoses. These valves shall be so placed and adjusted as to prevent excessive pressure in any of the fire main systems.

(c) Emergency power-operated fire pumps shall be independently driven self-contained pumps either with their own diesel engine prime mover and fuel supply fitted in an accessible position outside the compartment which contains the main fire pumps, or be driven by a self-contained generator, which may be the emergency generator referred to in regulation IV/17, of sufficient capacity and which is positioned in a safe place outside the

engine-room and preferably above the working deck. The emergency fire pump shall be capable of operating for a period of at least 3 h.

(d) Emergency fire pumps, sea-suction valves and other necessary valves shall be operable from outside compartments containing main fire pumps in a position not likely to be cut off by a fire in those compartments.

Regulation 18
Fire mains

(1) (a) Where more than one hydrant is required to provide the number of jets specified in regulation 19(2)(a), a fire main shall be provided.

(b) Fire mains shall have no connections other than those required for fire fighting, except for the purpose of washing the deck and anchor chains and operation of bilge ejectors, subject to the efficiency of the fire-fighting system being maintained.

(c) Where fire mains are not self-draining, suitable drain cocks shall be fitted where frost damage could be expected.[24]

(2) (a) The diameter of the fire main and water service pipes shall be sufficient for the effective distribution of the maximum required discharge from two fire pumps operating simultaneously or of 140 m^3/h, whichever is the less.

(b) With the two pumps simultaneously delivering through nozzles specified in regulation 19(5) the quantity of water specified in subparagraph (a), through any adjacent hydrants, the minimum pressure of 0.25 N/mm^2 shall be maintained at all hydrants.

Regulation 19
Fire hydrants, fire hoses and nozzles

(1) (a) The number of fire hoses provided shall be equal to the number of fire hydrants arranged according to paragraph (2) and one spare hose. This number does not include any fire hoses required in any engine or boiler room. The Administration may increase the number of fire hoses required so as to ensure that hoses in sufficient number are available and accessible at all times, having regard to the size of the vessel.

(b) Fire hoses shall be of approved material and sufficient in length to project a jet of water to any of the spaces in which they may be required to be used. Their maximum length shall be 20 m. Every fire hose shall be provided with a nozzle and the necessary couplings. Fire hoses shall, together with any necessary fittings and tools, be kept ready for use in conspicuous positions near the water service hydrants or connections.

(2) (a) The number and position of the hydrants shall be such that at least two jets of water not emanating from the same hydrant, one of which shall be from a single length of fire hose, may reach any part of the vessel normally accessible to the crew while the vessel is being navigated.

---

24 See the *Guidance for precautions against freezing of fire mains*, contained in recommendation 6 of attachment 3 to the *Final Act of the International Conference on Safety of Fishing Vessels*, 1993, as reproduced in attachment 3 to this consolidated text.

(b) All required hydrants shall be fitted with fire hoses having dual purpose nozzles as required by paragraph (5). One hydrant shall be located near the entrance of the space to be protected.

(3) Materials readily rendered ineffective by heat shall not be used for fire mains and hydrants, unless adequately protected. The pipes and hydrants shall be so placed that the fire hoses may be easily coupled to them. In vessels where deck cargo may be carried, the positions of the hydrants shall be such that they are always readily accessible and the pipes shall be arranged, as far as practicable, to avoid risk of damage by such cargo. Unless one fire hose and nozzle is provided for each hydrant, there shall be complete interchangeability of fire hose couplings and nozzles.

(4) A cock or valve shall be fitted to serve each fire hose so that any fire hose may be removed while the fire pumps are operating.

(5) (a) Standard nozzle sizes shall be 12 mm, 16 mm and 19 mm or as near thereto as possible. Larger diameter nozzles may be permitted at the discretion of the Administration.

(b) For accommodation and service spaces, a nozzle size greater than 12 mm need not be used.

(c) For machinery spaces and exterior locations, the nozzle size shall be such as to obtain the maximum discharge possible from two jets at the pressure specified in regulation 18(2)(b) from the smallest pump, provided that a nozzle size greater than 19 mm need not be used.

Regulation 20
Fire extinguishers[25]

(1) Fire extinguishers shall be of approved types. The capacity of required portable fluid extinguishers shall be not more than 13.5 *l* and not less than 9 *l*. Other extinguishers shall not be in excess of the equivalent portability of the 13.5 *l* fluid extinguisher and shall not be less than the fire-extinguishing equivalent of a 9 *l* fluid extinguisher. The Administration shall determine the equivalents of fire extinguishers.

(2) Spare charges shall be provided to the satisfaction of the Administration.

(3) Fire extinguishers containing an extinguishing medium which, in the opinion of the Administration, either by itself or under expected conditions of use, gives off toxic gases in such quantities as to endanger persons shall not be permitted.

(4) Fire extinguishers shall be periodically examined and subjected to such tests as the Administration may require.

(5) Normally, one of the portable fire extinguishers intended for use in any space shall be stowed near an entrance to that space.

---

25 See the *Improved Guidelines for marine portable fire extinguishers*, adopted by the Organization by resolution A.951(23).

Regulation 21
Portable fire extinguishers in control stations and accommodation and service spaces

(1) At least five approved portable fire extinguishers shall be provided in control stations and accommodation and service spaces, to the satisfaction of the Administration.

(2) Spare charges shall be provided to the satisfaction of the Administration.

Regulation 22
Fire-extinguishing appliances in machinery spaces

(1) (a) Spaces containing oil-fired boilers or fuel oil units shall be provided with one of the following fixed fire-extinguishing systems, to the satisfaction of the Administration:

(i) a pressure water-spraying installation;

(ii) a fire-smothering gas installation;

(iii) a fire-extinguishing installation using vapours from low toxicity vapourizing liquids; or

(iv) a fire-extinguishing installation using high expansion foam.

Where the engine and boiler rooms are not entirely separate, or if fuel oil can drain from the boiler room into the engine-room, the combined engine and boiler rooms shall be considered as one compartment.

(b) New installations of halogenated hydrocarbon systems used as fire-extinguishing media shall be prohibited on new and existing vessels.

(c) Every boiler room shall be provided with at least one set of portable air-foam equipment to the satisfaction of the Administration.

(d) At least two approved portable extinguishers discharging foam or equivalent shall be provided in each firing space in each boiler room and each space in which a part of the fuel oil installation is situated. At least one approved foam-type extinguisher of at least 135 *l* capacity or equivalent shall be provided with hoses on reels suitable for reaching any part of the boiler room. The Administration may relax the requirements of this subparagraph, having regard to the size and nature of the space to be protected.

(e) In each firing space, there shall be a receptacle containing sand, sawdust impregnated with soda or other approved dry material, in such quantity as may be required by the Administration. Alternatively, an approved portable extinguisher may be provided.

(2) Spaces containing internal combustion machinery used either for main propulsion or for other purposes, when such machinery has a total power output of not less than 750 kW, shall be provided with the following arrangements:

(a) one of the fire-extinguishing systems required by paragraph (1)(a);

(b) at least one set of portable air-foam equipment to the satisfaction of the Administration; and

(c) in each such space, approved foam-type fire extinguishers each of at least 45 *l* capacity, or equivalent, sufficient in number to enable foam or its equivalent to be directed on to any part of the fuel and lubricating oil pressure systems, gearing and other fire hazards. In addition, there shall be provided a sufficient number of portable foam extinguishers or equivalent which shall be so located that an extinguisher is not more than 10 m walking distance from any point in the space, provided that there shall be at least two such extinguishers in each such space. For smaller spaces, the Administration may relax these requirements.

(3) Spaces containing steam turbines or enclosed steam engines used either for main propulsion, or for other purposes, when such machinery has a total power output of not less than 750 kW shall be provided with the following arrangements:

(a) foam fire extinguishers each of at least 45 *l* capacity, or equivalent, sufficient in number to enable foam or its equivalent to be directed on to any part of the pressure lubrication system, on to any part of the casings enclosing pressure lubricated parts of the turbines, engines or associated gearing, and any other fire hazards. Provided that such extinguishers shall not be required if protection at least equivalent to that of this subparagraph is provided in such spaces by a fixed fire-extinguishing system fitted in compliance with paragraph (1)(a); and

(b) a sufficient number of portable foam extinguishers, or equivalent, which shall be so located that an extinguisher is not more than 10 m walking distance from any point in the space; provided that there shall be at least two such extinguishers in each such space, and such extinguishers shall not be required in addition to any provided in compliance with paragraph (2)(c).

(4) Where, in the opinion of the Administration, a fire hazard exists in any machinery space for which no specific provisions for fire-extinguishing appliances are prescribed in paragraphs (1), (2) and (3), there shall be provided in, or adjacent to, that space a number of approved portable fire extinguishers or other means of fire extinction to the satisfaction of the Administration.

(5) Where fixed fire-extinguishing systems not required by this part are installed, such systems shall be to the satisfaction of the Administration.

(6) For any machinery space of category A to which access is provided at a low level from an adjacent shaft tunnel, there shall be provided, in addition to any watertight door and on the side remote from that machinery space, a light steel fire-screen door which shall be capable of being operated from each side of the door.

Regulation 23
International shore connection

(1) At least one international shore connection, complying with paragraph (2), shall be provided.

(2) Standard dimensions of flanges for the international shore connection shall be in accordance with the following table:

Description	Dimension
Outside diameter	178 mm
Inner diameter	64 mm
Bolt circle diameter	132 mm
Slots in flange	4 holes 19 mm in diameter equidistantly placed on a bolt circle of the above diameter, slotted to the flange periphery
Flange thickness	14.5 mm minimum
Bolts and nuts	4 each of 16 mm in diameter and 50 mm in length

(3) This connection shall be constructed of material suitable for 1 N/ mm^2 service pressure.

(4) The flange shall have a flat face on one side and the other shall have a coupling permanently attached thereto that will fit the vessel's hydrant and hose. The connection shall be kept aboard the vessel together with a gasket of any material suitable for 1 N/mm^2 service pressure, together with four 16 mm bolts 50 mm in length and eight washers.

(5) Facilities shall be available enabling such a connection to be used on either side of the vessel.

Regulation 24
Fireman's outfits

(1) At least two fireman's outfits shall be carried to the satisfaction of the Administration.

(2) The fireman's outfits shall be stored so as to be easily accessible and ready for use and shall be stored in widely separated positions.

Regulation 25
Fire control plan

There shall be a permanently exhibited fire control plan to the satisfaction of the Administration.

Regulation 26
Ready availability of fire-extinguishing appliances

Fire-extinguishing appliances shall be kept in good order and available for immediate use at all times.

Regulation 27
Acceptance of substitutes

Where in this part any special type of appliance, apparatus, extinguishing medium or arrangement is specified, any other type of appliance, etc., may be allowed, provided the Administration is satisfied that it is not less effective.

PART C
FIRE SAFETY MEASURES IN VESSELS OF 45 METRES IN LENGTH AND OVER BUT LESS THAN 60 METRES

Regulation 28
Structural fire protection

(1) The hull, superstructure, structural bulkheads, decks and deckhouses shall be constructed of non-combustible materials. The Administration may permit combustible construction, provided the requirements of this regulation and the additional fire-extinguishing requirements of regulation 40(3) are complied with.

(2) (a) In vessels, the hull of which is constructed of non-combustible materials, the decks and bulkheads separating machinery spaces of category A from accommodation spaces, service spaces or control stations shall be constructed to "A-60" class standard where the machinery space of category A is not provided with a fixed fire-extinguishing system and to "A-30" class standard where such a system is fitted. Decks and bulkheads separating other machinery spaces from accommodation, service spaces and control stations shall be constructed to "A-0" class standard. Decks and bulkheads separating control stations from accommodation and service spaces shall be constructed to "A" class standard, insulated to the satisfaction of the Administration, except that an Administration may permit the fitting of "B-15" class divisions for separating such spaces as skipper's cabin from the wheelhouse.

(b) In vessels, the hull of which is constructed of combustible materials, the decks and bulkheads separating machinery spaces from accommodation spaces, service spaces or control stations shall be constructed to "F" class or "B-15" class standard. In addition, machinery space boundaries shall, as far as practicable, prevent the passage of smoke. Decks and bulkheads separating control stations from accommodation and service spaces shall be constructed to "F" class standard.

(3) (a) In vessels, the hull of which is constructed of non-combustible materials, bulkheads of corridors serving accommodation spaces, service spaces and control stations shall be of "B-15" class divisions.

(b) In vessels, the hull of which is constructed of combustible materials, bulkheads of corridors serving accommodation spaces, service spaces and control stations shall be of "F" class divisions.

(c) Any bulkhead required by subparagraph (a) or (b) shall extend from deck to deck unless a continuous ceiling of the same class as the bulkhead is fitted on both sides of the bulkhead, in which case the bulkhead may terminate at the continuous ceiling.

(4) Interior stairways serving accommodation spaces, service spaces or control stations shall be of steel or other equivalent material. Such stairways shall be within enclosures constructed of "F" class divisions in vessels the hull of which is constructed of combustible materials, or "B-15" class divisions in vessels the hull of which is constructed of non-combustible materials, provided that, where a stairway penetrates only one deck, it need be enclosed at one level only.

(5) Doors and other closures of openings in bulkheads and decks referred to in paragraphs (2) and (3), doors fitted to stairway enclosures referred to in paragraph (4) and doors fitted in engine and boiler casings, shall be as far as practicable equivalent in resisting fire to the divisions in which they are fitted. Doors to machinery spaces of category A shall be self-closing.

(6) Lift trunks which pass through the accommodation and service spaces shall be constructed of steel or equivalent material and shall be provided with means of closing which will permit control of draught and smoke.

(7) (a) In vessels, the hull of which is constructed of combustible materials, the boundary bulkheads and decks of spaces containing any emergency source of power and bulkheads and decks between galleys, paint rooms, lamp rooms or any store-rooms which contain appreciable quantities of highly flammable materials, and accommodation spaces, service spaces or control stations shall be constructed of "F" class or "B-15" class divisions.

(b) In vessels, the hull of which is constructed of non-combustible materials, the decks and bulkheads referred to in subparagraph (a) shall be "A" class divisions insulated to the satisfaction of the Administration, having in mind the risk of fire, except that the Administration may accept "B-15"' class divisions between a galley and accommodation spaces, service spaces and control stations when the galley contains electrically heated furnaces, electrically heated hot water appliances or other electrically heated appliances only.

(c) Highly flammable products shall be carried in suitably sealed containers.

(8) Where bulkheads or decks required by paragraphs (2), (3), (5) or (7) to be of "A" class, "B" class or "F" class divisions, are penetrated for the passage of electrical cables, pipes, trunks, ducts, etc., arrangements shall be made to ensure that the fire integrity of the division is not impaired.

(9) Air spaces enclosed behind ceilings, panellings or linings in accommodation spaces, service spaces and control stations shall be divided by close-fitting draught stops spaced not more than 7 m apart.

(10) Windows and skylights to machinery spaces shall be as follows:

(a) where skylights can be opened, they shall be capable of being closed from outside the space. Skylights containing glass panels shall be fitted with external shutters of steel or other equivalent material permanently attached;

(b) glass or similar materials shall not be fitted in machinery space boundaries. This does not preclude the use of wire-reinforced glass for skylights and glass in control rooms within the machinery spaces; and

(c) in skylights referred to in subparagraph (a), wire-reinforced glass shall be used.

(11) Insulating materials in accommodation spaces, service spaces except domestic refrigerating compartments, control stations and machinery spaces shall be non-combustible. The surface of insulation fitted on the internal boundaries of machinery spaces of category A shall be impervious to oil or oil vapours.

(12) Within compartments used for stowage of fish, combustible insulation shall be protected by close-fitting cladding.

(13) Notwithstanding the requirements of this regulation, the Administration may accept "A-0" class divisions in lieu of "B-15" or "F" class divisions, having regard to the amount of combustible materials used in adjacent spaces.

Regulation 29
Ventilation systems

(1) Except as provided for in regulation 30(2), means shall be provided to stop fans and close main openings to ventilation systems from outside the spaces served.

(2) Means shall be provided for closing, from a safe position, the annular spaces around funnels.

(3) Ventilation openings may be permitted in and under the doors in corridor bulkheads except that such openings shall not be permitted in and under stairway enclosure doors. The openings shall be provided only in the lower half of a door. Where such opening is in or under a door, the total net area of any such opening or openings shall not exceed 0.05 m^2. When such opening is cut in a door, it shall be fitted with a grille made of non-combustible material.

(4) Ventilation ducts for machinery spaces of category A or galleys shall not, in general, pass through accommodation spaces, service spaces or control stations. Where the Administration permits this arrangement, the ducts shall be constructed of steel or equivalent material and arranged to preserve the integrity of the divisions.

(5) Ventilation ducts of accommodation spaces, service spaces or control stations shall not, in general, pass through machinery spaces of category A or through galleys. Where the Administration permits this arrangement, the ducts shall be constructed of steel or equivalent material and arranged to preserve the integrity of the divisions.

(6) Store-rooms containing appreciable quantities of highly flammable products shall be provided with ventilation arrangements which are separate from other ventilation systems. Ventilation shall be arranged at high and low levels and the inlets and outlets of ventilators shall be positioned in safe areas. Suitable wire mesh guards to arrest sparks shall be fitted over inlet and outlet ventilation openings.

(7) Ventilation systems serving machinery spaces shall be independent of systems serving other spaces.

(8) Where trunks or ducts serve spaces on both sides of "A" class bulkheads or decks, dampers shall be fitted so as to prevent the spread of fire and smoke between compartments. Manual dampers shall be operable from both sides of the bulkhead or the deck. Where the trunks or ducts with a free cross-sectional area exceeding 0.02 m^2 pass through "A" class bulkheads or decks, automatic self-closing dampers shall be fitted. Trunks serving compartments situated only on one side of such bulkheads shall comply with regulation 9(1)(b).

Regulation 30
Heating installations

(1) Electric radiators shall be fixed in position and so constructed as to reduce fire risks to a minimum. No such radiator shall be fitted with an element so exposed that clothing, curtains or other similar materials can be scorched or set on fire by heat from the element.

(2) Heating by means of open fires shall not be permitted. Heating stoves and other similar appliances shall be firmly secured and adequate protection and insulation against fire shall be provided beneath and around such appliances and in way of their uptakes. Uptakes of stoves which burn solid fuel shall be so arranged and designed as to minimize the possibility of becoming blocked by combustion products and shall have a ready means for cleaning. Dampers for limiting draughts in uptakes shall, when in the closed position, still leave an adequate area open. Spaces in which stoves are installed shall be provided with ventilators of sufficient area to provide adequate combustion-air for the stove. Such ventilators shall have no means of closure and their position shall be such that no closing appliances in accordance with regulation II/9 are required.

(3) Open flame gas appliances, except cooking stoves and water heaters, shall not be permitted. Spaces containing any such stoves or water heaters shall have adequate ventilation to remove fumes and possible gas leakage to a safe place. All pipes conveying gas from container to stove or water heater shall be of steel or other approved material. Automatic safety gas shut-off devices shall be fitted to operate on loss of pressure in the gas main pipe or flame failure on any appliance.

Regulation 31
Miscellaneous items[26]

(1) Exposed surfaces within accommodation spaces, service spaces, control stations, corridor and stairway enclosures and the concealed surfaces behind bulkheads, ceilings, panellings and linings in accommodation spaces, service spaces and control stations shall have low flame-spread characteristics.[27]

(2) All exposed surfaces of glass reinforced plastic construction within accommodation and service spaces, control stations, machinery spaces of category A and other machinery spaces of similar fire risk shall have the final lay-up layer of approved resin having inherent fire-retardant properties or be coated with an approved fire-retardant paint or be protected by non-combustible materials.

(3) Paints, varnishes and other finishes used on exposed interior surfaces shall not be capable of producing excessive quantities of smoke or toxic gases or vapours. The Administration shall be satisfied that they are not of a nature to offer an undue fire hazard.

---

26 See the *Guidance concerning the use of certain plastic materials*, contained in recommendation 7 of attachment 3 to the *Final Act of the International Conference on Safety of Fishing Vessels*, 1993, as reproduced in attachment 3 to this consolidated text.

27 See the *Guidelines on the evaluation of fire hazard properties of materials*, adopted by the Organization by resolution A.166(ES.IV) and resolution A.653(16, as appropriate; and Part 5 – *Testing for surface flammability (test for surface materials and primary deck coverings)*, contained in Annex 1 of the *International Code for Application of Fire Test Procedures*, 2010, adopted by the Maritime Safety Committee of the Organization by resolution MSC.307(88).

(4) Primary deck coverings within accommodation and service spaces and control stations shall be of approved material which will not readily ignite or give rise to toxic or explosive hazards at elevated temperatures.[28]

(5) (a) In accommodation and service spaces and control stations, pipes penetrating "A" or "B" class divisions shall be of approved materials having regard to the temperature such divisions are required to withstand. Where the Administration permits the conveying of oil and combustible liquids through accommodation and service spaces, the pipes conveying oil or combustible liquids shall be of an approved material having regard to the fire risk.

(b) Materials readily rendered ineffective by heat shall not be used for overboard scuppers, sanitary discharges and other outlets which are close to the waterline and where the failure of the material in the event of fire would give rise to danger of flooding.

(6) All waste receptacles, other than those used in fish processing, shall be constructed of non-combustible materials with no openings in the sides and bottom.

(7) Machinery driving fuel oil transfer pumps, fuel oil unit pumps and other similar fuel pumps shall be fitted with remote controls situated outside the space concerned so that they can be stopped in the event of a fire arising in the space in which they are located.

(8) Drip trays shall be fitted, where necessary, to prevent oil leaking into bilges.

Regulation 32
Storage of gas cylinders and dangerous materials

(1) Cylinders for compressed, liquefied or dissolved gases shall be clearly marked by means of prescribed identifying colours, have a clearly legible identification of the name and chemical formula of their contents and be properly secured.

(2) Cylinders containing flammable or other dangerous gases and expended cylinders shall be stored, properly secured, on open decks and all valves, pressure regulators and pipes leading from such cylinders shall be protected against damage. Cylinders shall be protected against excessive variations in temperature, direct rays of the sun, and accumulation of snow. However, the Administration may permit such cylinders to be stored in compartments complying with the requirements of paragraphs (3) to (5).

(3) Spaces containing highly flammable liquids, such as volatile paints, paraffin, benzole, etc., and, where permitted, liquefied gas, shall have direct access from open decks only. Pressure-adjusting devices and relief valves shall exhaust within the compartment. Where boundary bulkheads of such compartments adjoin other enclosed spaces, they shall be gastight.

(4) Except as necessary for service within the space, electrical wiring and fittings shall not be permitted within compartments used for the storage of highly flammable liquids or liquefied gases. Where such electrical fittings are installed, they shall be to the satisfaction of the Administration for use in a flammable atmosphere. Sources of heat shall be kept clear of such spaces and "No smoking" and "No naked light" notices shall be displayed in a prominent position.

---

28 For vessels, the decks of which are constructed of steel, see the *Recommendation on Fire test procedures for ignitability of primary deck coverings*, adopted by the Organization by resolution A.687(17).

(5) Separate storage shall be provided for each type of compressed gas. Compartments used for the storage of such gases shall not be used for storage of other combustible products nor for tools or objects not part of the gas distribution system. However, the Administration may relax these requirements considering the characteristics, volume and intended use of such compressed gases.

Regulation 33
Means of escape

(1) Stairways and ladders leading to and from all accommodation spaces and in spaces in which the crew is normally employed, other than machinery spaces, shall be so arranged as to provide ready means of escape to the open deck and, thence, to the survival craft. In particular, in relation to these spaces:

(a) at all levels of accommodation at least two widely separated means of escape shall be provided which may include the normal means of access from each restricted space or group of spaces;

(b) (i) below the weather deck, the means of escape shall be a stairway and the second escape may be a trunk or a stairway; and

(ii) above the weather deck, the means of escape shall be stairways or doors to an open deck or a combination thereof. Where it is not practicable to fit stairways or doors, one of these means of escape may be by means of adequately sized portholes or hatches protected, where necessary, against ice accretion;

(c) exceptionally, the Administration may permit only one means of escape, due regard being paid to the nature and location of spaces and to the number of persons who normally might be accommodated or employed there;

(d) a corridor or a part of a corridor from which there is only one route of escape shall preferably not exceed 2.5 m in length and, in no case, be greater than 5 m in length; and

(e) the width and continuity of the means of escape shall be to the satisfaction of the Administration.

(2) Two means of escape shall be provided from every machinery space of category A which shall be as widely separated as possible. Vertical escapes shall be by means of steel ladders. Where the size of the machinery spaces makes it impracticable, one of these means of escape may be omitted. In such cases, special consideration shall be given to the remaining exit.

(3) Lifts shall not be considered as forming one of the required means of escape.

Regulation 34
Automatic fire alarm and fire detection systems

Where the Administration has permitted under regulation 28(1) a combustible construction, or where otherwise appreciable amounts of combustible materials are used on the construction of accommodation spaces, service spaces and control stations, special consideration shall be given to the installation of an automatic fire alarm and fire detection

system in those spaces, having due regard to the size of those spaces, their arrangement and location relative to control stations as well as, where applicable, the flame-spread characteristics of the installed furniture.

Regulation 35
Fire pumps

(1) The minimum number and type of fire pumps to be fitted shall be as follows:

(a) one power pump not dependent upon the main machinery for its motive power; or

(b) one power pump driven by main machinery, provided that the propeller shafting can be readily disconnected or provided that a controllable pitch propeller is fitted.

(2) Sanitary, bilge, ballast, general service or any other pumps may be used as fire pumps if they comply with the requirements of this chapter and do not affect the ability to cope with pumping of the bilges. Fire pumps shall be so connected that they cannot be used for pumping oil or other flammable liquids.

(3) Centrifugal pumps or other pumps connected to the fire main through which backflow could occur shall be fitted with non-return valves.

(4) Vessels not fitted with a power-operated emergency fire pump and without a fixed fire-extinguishing system in the machinery spaces shall be provided with additional fire-extinguishing means to the satisfaction of the Administration.

(5) Where fitted, emergency power-operated fire pumps shall be independently driven self-contained pumps either with their own prime mover and fuel supply fitted in an accessible position outside the compartment which contains the main fire pumps, or be driven by a self-contained generator which may be an emergency generator of sufficient capacity and which is positioned in a safe place outside the engine-room and preferably above the working deck.

(6) For any emergency fire pump, where fitted, the pump, sea-suction valves and other necessary valves shall be operable from outside compartments containing main fire pumps in a position not likely to be cut off by a fire in those compartments.

(7) The total capacity (Q) of main power-operated fire pumps shall be at least:

$$Q = (0.15\sqrt{L(B+D)} + 2.25)^2 \ m^3/h$$

where L, B and D are in metres.

(8) Where two independent power-operated fire pumps are fitted, the capacity of each pump shall not be less than 40% of the quantity required by paragraph (7).

(9) When main power fire pumps are delivering the quantity of water required by paragraph (7) through the fire main, fire hoses and nozzles, the pressure maintained at any hydrant shall be not less than 0.25 N/mm^2.

(10) Where power-operated emergency fire pumps are delivering the maximum quantity of water through the jet required by regulation 37(1), the pressure maintained at any hydrant shall be to the satisfaction of the Administration.

Regulation 36
Fire mains

(1) Where more than one hydrant is required to provide the number of jets required by regulation 37(1), a fire main shall be provided.

(2) Materials readily rendered ineffective by heat shall not be used for fire mains, unless adequately protected.

(3) Where fire pump delivery pressure can exceed the designed working pressure of fire mains, relief valves shall be fitted.

(4) Fire mains shall have no connections other than those required for fire fighting, except for the purpose of washing the deck and anchor chains and operation of bilge ejectors, subject to the efficiency of the fire-fighting system being maintained.

(5) Where fire mains are not self-draining, suitable drain cocks shall be fitted where frost damage may be expected.[29]

Regulation 37
Fire hydrants, fire hoses and nozzles

(1) Fire hydrants shall be positioned so as to allow easy and quick connection of fire hoses and so that at least one jet can be directed into any part of the vessel which is normally accessible during navigation.

(2) The jet required in paragraph (1) shall be from a single length of fire hose.

(3) In addition to the requirements of paragraph (1), machinery spaces of category A shall be provided with at least one hydrant complete with fire hose and dual purpose nozzle. The fire hydrant shall be located outside the space and near the entrance.

(4) For every required fire hydrant, there shall be one fire hose. At least one spare fire hose shall be provided in addition to this requirement.

(5) Single lengths of fire hose shall not exceed 20 m.

(6) Fire hoses shall be of an approved material. Each fire hose shall be provided with couplings and a dual purpose nozzle.

(7) Except where fire hoses are permanently attached to the fire main, the couplings of fire hoses and nozzles shall be completely interchangeable.

(8) The nozzles, as required by paragraph (6) shall be appropriate to the delivery capacity of the fire pumps fitted, but in any case shall have a diameter of not less than 12 mm.

---

29 See the *Guidance for precautions against freezing of fire mains*, contained in recommendation 6 of attachment 3 to the *Final Act of the International Conference on Safety of Fishing Vessels*, 1993, as reproduced in attachment 3 to this consolidated text.

Regulation 38
Fire extinguishers[30]

(1) Fire extinguishers shall be of approved types. The capacity of required portable fluid extinguishers shall be not more than 13.5 *l* and not less than 9 *l*. Other extinguishers shall not be in excess of the equivalent portability of the 13.5 *l* fluid extinguisher and shall not be less than the fire-extinguishing equivalent of a 9 *l* fluid extinguisher. The Administration shall determine the equivalents of fire extinguishers.

(2) Spare charges shall be provided to the satisfaction of the Administration.

(3) Fire extinguishers containing an extinguishing medium which, in the opinion of the Administration, either by itself or under expected conditions of use, gives off toxic gases in such quantities as to endanger persons shall not be permitted.

(4) Fire extinguishers shall be periodically examined and subjected to such tests as the Administration may require.

(5) Normally, one of the portable fire extinguishers intended for use in any space shall be stowed near an entrance to that space.

Regulation 39
Portable fire extinguishers in control stations and accommodation and service spaces

(1) A sufficient number of approved portable fire extinguishers shall be provided in control stations and accommodation and service spaces to ensure that at least one extinguisher of a suitable type is readily available for use in any part of such spaces. The total number of extinguishers in these spaces, however, shall not be less than three.

(2) Spare charges shall be provided to the satisfaction of the Administration.

Regulation 40
Fire-extinguishing appliances in machinery spaces

(1) (a) Spaces containing oil-fired boilers, fuel oil units or internal combustion machinery having a total power output of not less than 750 kW shall be provided with one of the following fixed fire-extinguishing systems, to the satisfaction of the Administration:

(i) a pressure water-spraying installation;

(ii) a fire-smothering gas installation;

(iii) a fire-extinguishing installation using vapours from low toxicity vapourizing liquids; or

(iv) a fire-extinguishing installation using high expansion foam.

(b) New installations of halogenated hydrocarbon systems used as fire-extinguishing media shall be prohibited on new and existing vessels.

---

30 See the *Improved Guidelines for marine portable fire extinguishers*, adopted by the Organization by resolution A.951(23).

(c) Where the engine and boiler rooms are not entirely separated from each other or if fuel oil can drain from the boiler room into the engine-room, the combined engine and boiler rooms shall be considered as one compartment.

(2) Installations listed in paragraph (1)(a) shall be controlled from readily accessible positions outside such spaces not likely to be cut off by a fire in the protected space. Arrangements shall be made to ensure the supply of power and water necessary for the operation of the system in the event of fire in the protected space.

(3) Vessels which are constructed mainly or wholly of wood or fibre reinforced plastic and fitted with oil-fired boilers or internal combustion machinery which are decked in way of the machinery space with such material, shall be provided with one of the extinguishing systems referred to in paragraph (1).

(4) In all machinery spaces of category A at least two portable extinguishers shall be provided, of a type suitable for extinguishing fires involving fuel oil. Where such spaces contain machinery which has a total power output of not less than 250 kW, at least three such extinguishers shall be provided. One of the extinguishers shall be stowed near the entrance to the space.

(5) Vessels having machinery spaces not protected by a fixed fire-extinguishing system shall be provided with at least a 45 *l* foam extinguisher or its equivalent, suitable for fighting oil fires. Where the size of the machinery spaces makes this provision impracticable, the Administration may accept an additional number of portable fire extinguishers.

Regulation 41
Fireman's outfits

The number of fireman's outfits and their location shall be to the satisfaction of the Administration.

Regulation 42
Fire control plan

There shall be a permanently exhibited fire control plan to the satisfaction of the Administration. In small vessels, the Administration may dispense with this requirement.

Regulation 43
Ready availability of fire-extinguishing appliances

Fire-extinguishing appliances shall be kept in good order and available for immediate use at all times.

Regulation 44
Acceptance of substitutes

Where in this part any special type of appliance, apparatus, extinguishing medium or arrangement is specified, any other type of appliance, etc., may be allowed provided the Administration is satisfied that it is not less effective.

CHAPTER VI
PROTECTION OF THE CREW

Regulation 1
General protection measures

(1) A lifeline system shall be designed to be effective for all needs and the necessary wires, ropes, shackles, eye bolts and cleats shall be provided.

(2) Deck openings provided with coamings or sills of less than 600 mm in height shall be provided with guards, such as hinged or portable railings or nettings. The Administration may exempt small openings such as fish scuttles from compliance with these requirements.

(3) Skylights or other similar openings shall be fitted with protective bars not more than 350 mm apart. The Administration may exempt small openings from compliance with this requirement.

(4) The surface of all decks shall be so designed or treated as to minimize the possibility of personnel slipping. In particular, decks of working areas, such as in machinery spaces, in galleys, at winches and where fish is handled as well as at the foot and head of ladders and in front of doors, shall be provided with anti-skid surfaces.

Regulation 2
Deck openings

(1) Hinged covers of hatchways, manholes and other openings shall be protected against accidental closing. In particular, heavy covers on escape hatches shall be equipped with counterweights, and so constructed as to be capable of being opened from each side of the cover.

(2) Dimensions of access hatches shall not be less than 600 mm by 600 mm or 600 mm diameter.

(3) Where practicable, handholds shall be provided above the level of the deck over escape openings.

Regulation 3
Bulwarks, rails and guards

(1) Efficient bulwarks or guard rails shall be fitted on all exposed parts of the working deck and on superstructure decks if they are working platforms. The height of bulwarks or guard rails above deck shall be at least 1 m. Where this height would interfere with the normal operation of the vessel, a lesser height may be approved by the Administration.

(2) The minimum vertical distance from the deepest operating waterline to the lowest point of the top of the bulwark, or to the edge of the working deck if guard rails are fitted shall ensure adequate protection of the crew from water shipped on deck, taking into account the sea states and the weather conditions in which the vessel may operate, the areas of operation, type of vessel and its method of fishing and shall be to the satisfaction of the Administration.[31]

---

31 See the *Guidance on a method of calculation of the minimum distance from the deepest operating waterline to the lowest point of the top of the bulwark or to the edge of the working deck*, contained in recommendation 8 of attachment 3 to the *Final Act of the International Conference on Safety of Fishing Vessels*, 1993, as reproduced in attachment 3 to this consolidated text.

(3) Clearance below the lowest course of guard rails shall not exceed 230 mm. Other courses shall not be more than 380 mm apart, and the distance between stanchions shall not be more than 1.5 m. In a vessel with rounded gunwales, guard rail supports shall be placed on the flat of the deck. Rails shall be free from sharp points, edges and corners and shall be of adequate strength.

(4) Means to the satisfaction of the Administration, such as guard rails, lifelines, gangways or underdeck passages, shall be provided to protect the crew in moving between accommodation, machinery and other working spaces. Storm rails shall be fitted, as necessary to the outside of all deckhouses and casings to secure safety of passage or work for the crew.

(5) Stern trawlers shall be provided with suitable protection such as doors, gates or nets at the top of the stern ramp at the same height as the adjacent bulwark or guard rails. When such protection is not in position, a chain or other means of protection shall be provided across the ramp.

Regulation 4
Stairways and ladders

For the safety of the crew, stairways and ladders of adequate size and strength with handrails and non-slip treads shall be provided to the satisfaction of the Administration.

CHAPTER VII
LIFE-SAVING APPLIANCES AND ARRANGEMENTS

PART A
GENERAL

Regulation 1
Application

(1) Unless expressly provided otherwise, this chapter shall apply to new vessels of 45 m in length and over.

(2) Regulations 13 and 14 shall also apply to existing vessels of 45 m in length and over, provided that the Administration may defer the implementation of the requirements of these regulations until 1 February 1999 or the date of entry into force of this Protocol, whichever occurs later.

Regulation 2
Definitions

(1) *Float-free launching* is that method of launching a survival craft whereby the craft is automatically released from a sinking vessel and is ready for use.

(2) *Free-fall launching* is that method of launching a survival craft whereby the craft with its complement of persons and equipment on board is released and allowed to fall into the sea without any restraining apparatus.

(3) *Inflatable appliance* is an appliance which depends upon non-rigid, gas-filled chambers for buoyancy and which is normally kept uninflated until ready for use.

(4) *Inflated appliance* is an appliance which depends upon non-rigid, gas-filled chambers for buoyancy and which is kept inflated and ready for use at all times.

(5) *Launching appliance or arrangement* is a means of transferring a survival craft or rescue boat from its stowed position safely to the water.

(6) *Novel life-saving appliance or arrangement* is a life-saving appliance or arrangement which embodies new features not fully covered by the provisions of this chapter but which provides an equal or higher standard of safety.

(7) *Rescue boat* is a boat designed to rescue persons in distress and to marshal survival craft.

(8) *Retro-reflective material* is a material which reflects in the opposite direction a beam of light directed on it.

(9) *Survival craft* is a craft capable of sustaining the lives of persons in distress from the time of abandoning the vessel.

Regulation 3
Evaluation, testing and approval of life-saving appliances and arrangements

(1) Except as provided in paragraphs (5) and (6), life-saving appliances and arrangements required by this chapter shall be approved by the Administration.

(2) Before giving approval to life-saving appliances and arrangements, the Administration shall ensure that such life-saving appliances and arrangements:

(a) are tested, to confirm that they comply with the requirements of this chapter, in accordance with the recommendations of the Organization;[32] or

(b) have successfully undergone, to the satisfaction of the Administration, tests which are substantially equivalent to those specified in those recommendations.

(3) Before giving approval to novel life-saving appliances or arrangements, the Administration shall ensure that such appliances or arrangements:

(a) provide safety standards at least equivalent to the requirements of this chapter and have been evaluated and tested in accordance with the recommendations of the Organization;[33] or

(b) have successfully undergone, to the satisfaction of the Administration, evaluation and tests which are substantially equivalent to those recommendations.

(4) Procedures adopted by the Administration for approval shall also include the conditions whereby approval would continue or would be withdrawn.

---

32 See the *Revised Recommendation on testing of life-saving appliances*, adopted by the Maritime Safety Committee of the Organization by resolution MSC.89(70) as amended.

33 See the *Code of practice for the evaluation, testing and acceptance of prototype novel life-saving appliances and arrangements*, adopted by the Organization by resolution A.520(13).

(5) Before accepting life-saving appliances and arrangements that have not been previously approved by the Administration, the Administration shall be satisfied that life-saving appliances and arrangements comply with the requirements of this chapter.

(6) Life-saving appliances required by this chapter, for which detailed specifications are not included in part C, shall be to the satisfaction of the Administration.

Regulation 4
Production tests

The Administration shall require life-saving appliances to be subjected to such production tests as are necessary to ensure that the life-saving appliances are manufactured to the same standard as the approved prototype.

PART B
VESSEL REQUIREMENTS

Regulation 5
Number and types of survival craft and rescue boats

(1) Every vessel shall be provided with at least two survival craft.

(2) The number, capacity and type of survival craft and rescue boats of vessels of 75 m in length and over shall comply with the following:

(a) survival craft of sufficient aggregate capacity to accommodate on each side of the vessel at least the total number of persons on board shall be provided. However, if the vessel complies with subdivision requirements, damage stability criteria and criteria of increased structural fire protection additional to those stipulated by regulation III/14 and by chapter V, and the Administration considers that a decrease of the number of survival craft and their capacity will not affect safety, the Administration may allow this decrease, provided that the aggregate capacity of survival craft situated on each side of the vessel is sufficient to accommodate at least 50% of the persons on board. In addition, liferafts for at least 50% of the total number of persons on board shall be provided; and

(b) a rescue boat shall be provided, unless the vessel is provided with a lifeboat which fulfils the requirements for a rescue boat and which is capable of being recovered after the rescue operation.

(3) Vessels of less than 75 m in length shall comply with the following:

(a) survival craft of sufficient aggregate capacity to accommodate on each side of the vessel at least the total number of persons on board shall be provided; and

(b) a rescue boat shall be provided, unless the vessel is provided with a suitable survival craft which is capable of being recovered after the rescue operation.

(4) In lieu of meeting the requirements of paragraph 2(a) or 3(a), vessels may carry one or more lifeboats capable of being free-fall launched over the stern of the vessel of sufficient capacity to accommodate the total number of persons on board and with liferafts of sufficient capacity to accommodate the total number of persons on board.

(5) Where the arrangement required in paragraph (3)(a) would interfere with the normal operation of the vessel, the Administration may decide, in lieu of meeting the requirements, that vessels carry survival craft capable of being launched from only one side of the vessel. These survival craft shall be of sufficient aggregate capacity to accommodate at least twice the total number of persons on board, provided that the survival craft of sufficient capacity to accommodate the total number of persons on board can be easily transferred to the other side of the vessel, where they can be launched safely and rapidly.

(6) In the event of any one survival craft being lost or rendered unserviceable, there shall be sufficient survival craft available for use on either side, including those which are stowed in a position to be transferred to the other side, to accommodate the total number of persons on board. The transfer shall be easy to do, at a single open deck level, and all craft shall be free of obstacles to avoid entrapment and facilitate easy deployment.

(7) Where the arrangement required in paragraph (3)(b) would interfere with the normal operation of the vessel, the Administration may decide, in lieu of meeting the requirements, that vessels carry other equivalent appliances for rescuing persons from the water, taking into account the vessel's navigational area and operational condition.

(8) The number of lifeboats and rescue boats that are carried on vessels shall be sufficient to ensure that, in providing for abandonment by the total number of persons on board, not more than nine liferafts need be marshalled by each lifeboat or rescue boat.

(9) The survival craft and rescue boats shall comply with the applicable requirements of regulations 17 to 23 inclusive.

Regulation 6
Availability and stowage of survival craft and rescue boats

(1) Survival craft shall:

(a) (i) be readily available in case of emergency;

(ii) be capable of being launched safely and rapidly under the conditions required by regulation 32(1)(a); and

(iii) be capable of rapid recovery if fulfilling also the requirements for a rescue boat;

(b) be so stowed that:

(i) the marshalling of persons at the embarkation deck is not impeded;

(ii) their prompt handling is not impeded;

(iii) embarkation can be effected rapidly and in good order; and

(iv) the operation of any other survival craft is not interfered with.

(2) Where the distance from the embarkation deck to the waterline of the vessel in the lightest operating condition exceeds 4.5 m, survival craft, except float-free liferafts, shall be capable of being davit-launched with a full complement of persons or be provided with equivalent approved means of embarkation.

(3) Survival craft and launching appliances shall be in working order and available for immediate use before the vessel leaves port and kept so at all times when at sea.

(4) (a) Survival craft shall be stowed to the satisfaction of the Administration.

(b) Every lifeboat shall be attached to a separate set of davits or approved launching appliance.

(c) Survival craft shall be positioned as close to accommodation and service spaces as possible, stowed in suitable positions to ensure safe launching, with particular regard to clearance from the propeller. Lifeboats for lowering down the vessel's side shall be stowed with regard to steeply overhanging portions of the hull, so ensuring, as far as practicable, that they can be launched down the straight side of the vessel. If positioned forward, they shall be stowed abaft the collision bulkhead in a sheltered position and in this respect the Administration shall give special consideration to the strength of the davits.

(d) The method of launching and recovering of rescue boats shall be approved taking into account the weight of the rescue boat including its equipment and 50% of the number of persons it is certificated to carry in regulations 23(1)(b)(ii) and 23(1)(c), the construction and size of the rescue boat and its position of stowage above the waterline in the vessel's lightest operating condition. However, every rescue boat stowed at a height of more than 4.5 m above the waterline in the vessel's lightest operating condition shall be provided with approved arrangements for launching and recovery.

(e) Launching and embarkation appliances shall comply with the requirements of regulation 32.

(f) (i) The liferafts shall be so stowed as to be readily available in case of emergency in such a manner as to permit them to float free from their stowage, inflate and break free from the vessel in the event of its sinking. However, davit-launched liferafts need not float free.

(ii) Lashings, if used, shall be fitted with an automatic (hydrostatic) release system of an approved type.

(g) The Administration, if it is satisfied that the constructional features of the vessel and the method of fishing operation may render it unreasonable and impractical to apply particular provisions of this paragraph, may accept relaxations from such provisions, provided that the vessel is fitted with alternative launching and recovering arrangements adequate for the service for which it is intended. The Administration which has allowed alternative launching and recovery arrangements under this subparagraph shall inform the Organization of the particulars of such arrangements for circulation to other Parties.

Regulation 7
Embarkation into survival craft

Suitable arrangements shall be made for embarkation into the survival craft, which shall include:

(a) at least one ladder, or other approved means, on each side of the vessel to afford access to the survival craft when waterborne, except where the Administration is satisfied that the distance from the point of embarkation to the waterborne survival craft is such that a ladder is unnecessary;

(b) means for illuminating the stowage position of survival craft and their launching appliances during preparation for, and the process of, launching, and also for illuminating the water into which the survival craft are launched until the process of launching is completed, the power for which is to be supplied from the emergency source required by regulation IV/17;

(c) arrangements for warning all persons on board that the vessel is about to be abandoned; and

(d) means for preventing any discharge of water into the survival craft.

Regulation 8
Lifejackets

(1) For every person on board, a lifejacket of an approved type complying with the requirements of regulation 24 shall be carried.

(2) Lifejackets shall be so placed as to be readily accessible and their position shall be plainly indicated.

Regulation 9
Immersion suits and thermal protective aids

(1) An approved immersion suit, of an appropriate size, complying with the requirements of regulation 25 shall be provided for every person assigned to crew the rescue boat.

(2) Vessels complying with the requirements of regulation 5(2) and (3) shall carry immersion suits complying with the requirements of regulation 25 for every person on board not accommodated in:

(a) lifeboats; or

(b) davit-launched liferafts; or

(c) liferafts served by equivalent approved appliances which do not require entry into the water to board the liferaft.

(3) In addition to paragraph (2)(a), vessels shall carry for each lifeboat at least three immersion suits complying with the requirements of regulation 25. In addition to the thermal protective aids required by regulation 17(8)(xxxi), vessels shall carry thermal protective aids complying with the requirements of regulation 26 for persons to be accommodated in the lifeboats and not provided with immersion suits. These immersion suits and thermal protective aids need not be required if the vessel is equipped with either totally enclosed

lifeboats of such aggregate capacity as to accommodate on each side of the vessel at least the total number of persons on board or a free-fall lifeboat of sufficient capacity to accommodate the total number of persons on board.

(4) The requirements of paragraphs (2) and (3) do not apply to vessels constantly engaged in warm climates, where, in the opinion of the Administration, immersion suits and thermal protective aids are unnecessary.

(5) The immersion suits required by paragraphs (2) and (3) may be used to comply with the requirements of paragraph (1).

Regulation 10
Lifebuoys

(1) At least the following number of lifebuoys complying with the requirements of regulation 27(1) shall be provided:

(a) eight lifebuoys in vessels of 75 m in length and over; and

(b) six lifebuoys in vessels of less than 75 m in length.

(2) At least half of the number of lifebuoys referred to in paragraph (1) shall be provided with self-igniting lights complying with the requirements of regulation 27(2).

(3) At least two of the lifebuoys provided with self-igniting lights in accordance with paragraph (2) shall be provided with self-activitating smoke signals complying with the requirements of regulation 27(3), and shall, where practicable, be capable of quick release from the navigation bridge.

(4) At least one lifebuoy on each side of the vessel shall be fitted with a buoyant lifeline complying with the requirements of regulation 27(4) equal in length to not less than twice the height at which it is stowed above the waterline in the lightest seagoing condition, or 30 m, whichever is greater. Such lifebuoys shall not have self-igniting lights.

(5) All lifebuoys shall be so placed as to be readily accessible to the persons on board and shall always be capable of being rapidly cast loose and shall not be permanently secured in any way.

Regulation 11
Line-throwing appliances

Every vessel shall carry a line-throwing appliance of an approved type, complying with the requirements of regulation 28.

Regulation 12
Distress signals

(1) Every vessel shall be provided, to the satisfaction of the Administration, with means of making effective distress signals by day and by night, including at least 12 rocket parachute flares complying with the requirements of regulation 29.

(2) Distress signals shall be of an approved type. They shall be so placed as to be readily accessible and their position shall be plainly indicated.

Regulation 13
Radio life-saving appliances

(1) At least three two-way VHF radiotelephone apparatus shall be provided on every vessel. Such apparatus shall conform to performance standards not inferior to those adopted by the Organization.[34] If a fixed two-way VHF radiotelephone apparatus is fitted in a survival craft, it shall conform to performance standards not inferior to those adopted by the Organization.[34]

(2) Two-way VHF radiotelephone apparatus provided on board existing vessels and not complying with the performance standards adopted by the Organization may be accepted by the Administration until 1 February 1999, or the date of entry into force of this Protocol, whichever occurs later, provided that the Administration is satisfied that they are compatible with approved two-way VHF radiotelephone apparatus.

Regulation 14
Radar transponders

At least one radar transponder shall be carried on each side of every vessel. Such radar transponders shall conform to performance standards not inferior to those adopted by the Organization.[35] The radar transponders[36] shall be stowed in such locations that they can be rapidly placed in any survival craft. Alternatively, one radar transponder shall be stowed in each survival craft.

Regulation 15
Retro-reflective materials on life-saving appliances

All survival craft, rescue boats, lifejackets and lifebuoys shall be fitted with retro-reflective material in accordance with the recommendations of the Organization.[37]

Regulation 16
Operational readiness, maintenance and inspections

(1) Operational readiness

Before the vessel leaves port and at all times during the voyage, all life-saving appliances shall be in working order and ready for immediate use.

(2) Maintenance

(a) Instructions for on-board maintenance of life-saving appliances approved by the Administration shall be provided and maintenance shall be carried out accordingly.

---

34 See the *Recommendation on Performance standards for survival craft portable two-way VHF radiotelephone apparatus*, adopted by the Organization by resolution A.809(19), annex 1 or annex 2, as applicable, and the *Revised performance standards for survival craft portable two-way VHF radiotelephone apparatus*, adopted by resolution MSC.149(77).

35 See the *Recommendation on Performance standards for survival craft radar transponders for use in search and rescue operations*, adopted by the Organization by resolution A.802(19), as amended.

36 One of these may be the radar transponder required by regulation IX/6(1)(c).

37 See the *Recommendation on the Use and fitting of retro-reflective materials on life-saving appliances*, adopted by the Organization by resolution A.658(16).

(b) The Administration may accept, in lieu of the instructions required by subparagraph (a), a shipboard planned maintenance programme.

(3) Maintenance of falls

Falls used in launching shall be turned end for end at intervals of not more than 30 months and be renewed when necessary due to deterioration of the falls or at intervals of not more than 5 years, whichever is the earlier.

(4) Spares and repair equipment

Spares and repair equipment shall be provided for life-saving appliances and their components which are subject to excessive wear or consumption and need to be replaced regularly.

(5) Weekly inspection

The following tests and inspections shall be carried out weekly:

(a) all survival craft, rescue boats and launching appliances shall be visually inspected to ensure that they are ready for use;

(b) all engines in lifeboats and rescue boats shall be run ahead and astern for a total period of not less than 3 min provided the ambient temperature is above the minimum temperature required for starting the engine; and

(c) the general emergency alarm system shall be tested.

(6) Monthly inspections

Inspection of the life-saving appliances, including lifeboat equipment, shall be carried out monthly using a checklist to ensure that they are complete and in good order. A report of the inspection shall be entered in the log-book.

(7) Servicing of inflatable liferafts, inflatable lifejackets and inflated rescue boats

(a) Every inflatable liferaft and inflatable lifejacket shall be serviced:

(i) at intervals not exceeding 12 months. However, in cases where it appears proper and reasonable, the Administration may extend this period to 17 months;

(ii) at an approved servicing station which is competent to service them, maintains proper servicing facilities and uses only properly trained personnel.[38]

(b) All repairs and maintenance of inflated rescue boats shall be carried out in accordance with the manufacturer's instructions. Emergency repairs may be carried out on board the vessel; however, permanent repairs shall be effected at an approved servicing station.

---

38 See the *Recommendation on conditions for the approval of servicing stations for inflatable liferafts*, adopted by the Organization by resolution A.761(18).

(8) Periodic servicing of hydrostatic release units

Disposable hydrostatic release units shall be replaced when their date of expiry has passed. If not disposable, hydrostatic release units shall be serviced:

(a) at intervals not exceeding 12 months. However, in cases where it appears proper and reasonable, the Administration may extend this period to 17 months;

(b) at a servicing station which is competent to service them, maintains proper servicing facilities and uses only properly trained personnel.

(9) In cases of vessels where the nature of fishing operations may cause difficulty for compliance with the requirements of paragraphs (7) and (8), the Administration may allow the extension of the service intervals to 24 months, provided that the Administration is satisfied that such appliances are so manufactured and arranged that they will remain in satisfactory condition until the next period of servicing.

PART C
LIFE-SAVING APPLIANCES REQUIREMENTS

Regulation 17
General requirements for lifeboats

(1) Construction of lifeboats

(a) All lifeboats shall be properly constructed and shall be of such form and proportions that they have ample stability in a seaway and sufficient freeboard when loaded with their full complement of persons and equipment. All lifeboats shall have rigid hulls and shall be capable of maintaining positive stability when in an upright position in calm water and loaded with their full complement of persons and equipment and holed in any one location below the waterline, assuming no loss of buoyancy material and no other damage.

(b) All lifeboats shall be of sufficient strength to enable them to be safely lowered into the water when loaded with their full complement of persons and equipment.

(c) Hulls and rigid covers shall be fire-retardant or non-combustible.

(d) Seating shall be provided on thwarts, benches or fixed chairs fitted as low as practicable in the lifeboat and constructed so as to be capable of supporting the number of persons each weighing 100 kg for which spaces are provided in compliance with the requirements of paragraph (2)(b)(ii).

(e) Each lifeboat shall be of sufficient strength to withstand a load, without residual deflection on removal of that load:

(i) in the case of boats with metal hulls, 1.25 times the total mass of the lifeboat when loaded with its full complement of persons and equipment; or

(ii) in the case of other boats, twice the total mass of the lifeboat when loaded with its full complement of persons and equipment.

(f) Each lifeboat shall be of sufficient strength to withstand, when loaded with its full complement of persons and equipment and with, where applicable, skates or fenders in position, a lateral impact against the vessel's side at an impact velocity of at least 3.5 m/s and also a drop into the water from a height of at least 3 m.

(g) The vertical distance between the floor surface and the interior of the enclosure or canopy over 50% of the floor area shall be:

(i) not less than 1.3 m for a lifeboat permitted to accommodate nine persons or less;

(ii) not less than 1.7 m for a lifeboat permitted to accommodate 24 persons or more;

(iii) not less than the distance as determined by linear interpolation between 1.3 m and 1.7 m for a lifeboat permitted to accommodate between 9 and 24 persons.

(2) Carrying capacity of lifeboats

(a) No lifeboat shall be approved to accommodate more than 150 persons.

(b) The number of persons which a lifeboat shall be permitted to accommodate shall be equal to the lesser of:

(i) the number of persons having an average mass of 75 kg, all wearing lifejackets, that can be seated in a normal position without interfering with the means of propulsion or the operation of any of the lifeboat's equipment; or

(ii) the number of spaces that can be provided on the seating arrangements in accordance with figure 1. The shapes may be overlapped as shown, provided footrests are fitted and there is sufficient room for legs and the vertical separation between the upper and lower seat is not less than 350 mm.

(c) Each seating position shall be clearly indicated in the lifeboat.

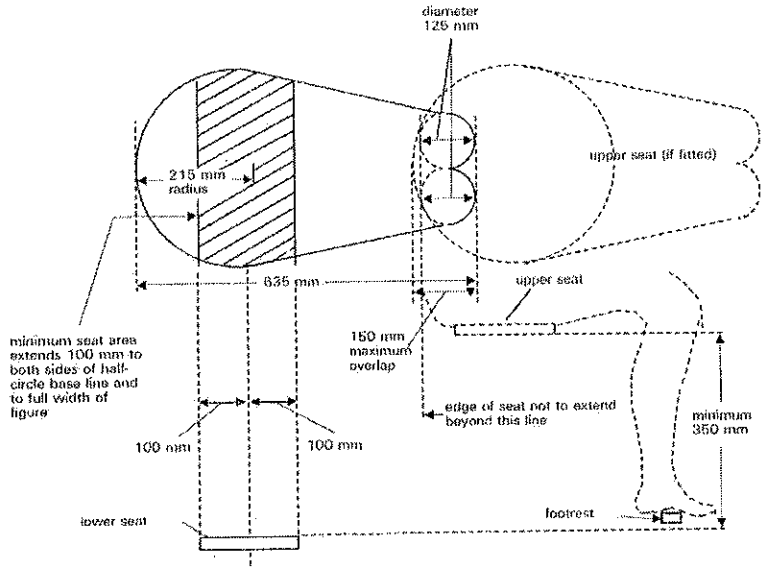

Figure 1

(3) Access into lifeboats

(a) Every vessel lifeboat shall be so arranged that it can be boarded by its full complement of persons in not more than 3 min from the time the instruction to board is given. Rapid disembarkation shall also be possible.

(b) Lifeboats shall have a boarding ladder that can be used on either side of the lifeboat to enable persons in the water to board the lifeboat. The lowest step of the ladder shall be not less than 0.4 m below the lifeboat's light waterline.

(c) The lifeboat shall be so arranged that helpless people can be brought on board either from the sea or on stretchers.

(d) All surfaces on which persons might walk shall have a non-skid finish.

(4) Lifeboat buoyancy

All lifeboats shall have inherent buoyancy or shall be fitted with inherently buoyant material which shall not be adversely affected by seawater, oil or oil products, sufficient to float the lifeboat with all its equipment on board when flooded and open to the sea. Additional inherently buoyant material, equal to 280 N of buoyant force per person shall be provided for the number of persons the lifeboat is permitted to accommodate. Buoyant material, unless in addition to that required above, shall not be installed external to the hull of the lifeboat.

(5) Lifeboat freeboard and stability

All lifeboats, when loaded with 50% of the number of persons the lifeboat is permitted to accommodate seated in their normal positions to one side of the centreline, shall have a freeboard, measured from the waterline to the lowest opening through which the lifeboat may become flooded, of at least 1.5% of the lifeboat's length or 100 mm, whichever is the greater.

(6) Lifeboat propulsion

(a) Every lifeboat shall be powered by a compression ignition engine. No engine shall be used for any lifeboat if its fuel has a flashpoint of 43°C or less (closed cup test).

(b) The engine shall be provided with either a manual starting system, or a power starting system with two independent rechargeable energy sources. Any necessary starting aids shall also be provided. The engine starting systems and starting aids shall start the engine at an ambient temperature of -15°C within 2 min of commencing the start procedure unless, in the opinion of the Administration having regard to the particular voyages in which the vessel carrying the lifeboat is constantly engaged, a different temperature is appropriate. The starting systems shall not be impeded by the engine casing, thwarts or other obstructions.

(c) The engine shall be capable of operating for not less than 5 min after starting from cold with the lifeboat out of the water.

(d) The engine shall be capable of operating when the lifeboat is flooded up to the centreline of the crankshaft.

(e) The propeller shafting shall be so arranged that the propeller can be disengaged from the engine. Provision shall be made for ahead and astern propulsion of the lifeboat.

(f) The exhaust pipe shall be so arranged as to prevent water from entering the engine in normal operation.

(g) All lifeboats shall be designed with due regard to the safety of persons in the water and to the possibility of damage to the propulsion system by floating debris.

(h) The speed of a lifeboat when proceeding ahead in calm water, when loaded with its full complement of persons and equipment and with all engine-powered auxiliary equipment in operation, shall be at least 6 knots and at least 2 knots when towing a 25-person liferaft loaded with its full complement of persons and equipment or its equivalent. Sufficient fuel, suitable for use throughout the temperature range expected in the area in which the vessel operates, shall be provided to run the fully loaded lifeboat at 6 knots for a period of not less than 24 h.

(i) The lifeboat engine, transmission and engine accessories shall be enclosed in a fire-retardant casing or other suitable arrangements providing similar protection. Such arrangements shall also protect persons from coming into accidental contact with hot or moving parts and protect the engine from exposure to weather and sea. Adequate means shall be provided to reduce the engine noise. Starter batteries shall be provided with casings

which form a watertight enclosure around the bottom and sides of the batteries. The battery casings shall have a tight fitting top which provides for necessary gas venting.

(j) The lifeboat engine and accessories shall be designed to limit electromagnetic emissions so that engine operation does not interfere with the operation of radio life-saving appliances used in the lifeboat.

(k) Means shall be provided for recharging all engine-starting, radio and searchlight batteries. Radio batteries shall not be used to provide power for engine starting. Means shall be provided for recharging lifeboat batteries from the vessel's power supply at a supply voltage not exceeding 55 V which can be disconnected at the lifeboat embarkation station.

(l) Water-resistant instructions for starting and operating the engine shall be provided and mounted in a conspicuous place near the engine starting controls.

(7) Lifeboat fittings

(a) All lifeboats shall be provided with at least one drain valve fitted near the lowest point in the hull, which shall automatically open to drain water from the hull when the lifeboat is not waterborne and shall automatically close to prevent entry of water when the lifeboat is waterborne. Each drain valve shall be provided with a cap or plug to close the valve, which shall be attached to the lifeboat by a lanyard, a chain, or other suitable means. Drain valves shall be readily accessible from inside the lifeboat and their position shall be clearly indicated.

(b) All lifeboats shall be provided with a rudder and tiller. When a wheel or other remote steering mechanism is also provided, the tiller shall be capable of controlling the rudder in case of failure of the steering mechanism. The rudder shall be permanently attached to the lifeboat. The tiller shall be permanently installed on, or linked to, the rudder stock; however, if the lifeboat has a remote steering mechanism, the tiller may be removable and securely stowed near the rudder stock. The rudder and tiller shall be so arranged as not to be damaged by operation of the release mechanism or the propeller.

(c) Except in the vicinity of the rudder and propeller, a buoyant lifeline shall be becketed around the outside of the lifeboat.

(d) Lifeboats which are not self-righting when capsized shall have suitable handholds on the underside of the hull to enable persons to cling to the lifeboat. The handholds shall be fastened to the lifeboat in such a way that, when subjected to an impact sufficient to cause them to break away from the lifeboat, they break away without damaging the lifeboat.

(e) All lifeboats shall be fitted with sufficient watertight lockers or compartments to provide for the storage of the small items of equipment, water and provisions required by paragraph (8). Means shall be provided for the storage of collected rainwater.

(f) Every lifeboat to be launched by a fall or falls shall be fitted with a release mechanism complying with the following requirements:

(i) the mechanism shall be so arranged that all hooks are released simultaneously;

(ii) the mechanism shall have two release capabilities as follows:

(1) a normal release capability which will release the lifeboat when it is waterborne or when there is no load on the hooks;

(2) an on-load release capability which will release the lifeboat with a load on the hooks. This release shall be so arranged as to release the lifeboat under any conditions of loading from no-load with the lifeboat waterborne to a load of 1.1 times the total mass of the lifeboat when loaded with its full complement of persons and equipment. This release capability shall be adequately protected against accidental or premature use;

(iii) the release control shall be clearly marked in a colour that contrasts with its surroundings;

(iv) the mechanism shall be designed with a factor of safety of 6 based on the ultimate strength of the materials used, assuming the mass of the lifeboat is equally distributed between the falls.

(g) Every lifeboat shall be fitted with a release device to enable the forward painter to be released when under tension.

(h) Every lifeboat which is fitted with a fixed two-way VHF radiotelephone apparatus with an antenna which is separately mounted shall be provided with arrangements for siting and securing the antenna effectively in its operating position.

(i) Lifeboats intended for launching down the side of a vessel shall have skates and fenders, as necessary, to facilitate launching and prevent damage to the lifeboat.

(j) A manually controlled lamp visible on a dark night with a clear atmosphere at a distance of at least 2 miles for a period of not less than 12 h shall be fitted to the top of the cover or enclosure. If the light is a flashing light, it shall initially flash at a rate of not less than 50 flashes per minute over the first 2 h of operation of the 12-hour operating period.

(k) A lamp or source of light shall be fitted inside the lifeboat to provide illumination for not less than 12 h to enable reading of survival and equipment instructions; however, oil lamps shall not be permitted for this purpose.

(l) Unless expressly provided otherwise, every lifeboat shall be provided with effective means of bailing or be automatically self-bailing.

(m) Every lifeboat shall be so arranged that an adequate view forward, aft and to both sides is provided from the control and steering position for safe launching and manoeuvring.

(8) Lifeboat equipment

All items of lifeboat equipment, whether required by this paragraph or elsewhere in this chapter, with the exception of boat-hooks which shall be kept free for fending off purposes, shall be secured within the lifeboat by lashings, storage in lockers or compartments, storage in brackets or similar mounting arrangements or other suitable means. The equipment shall be secured in such a manner as not to interfere with any abandonment procedures. All items of lifeboat equipment shall be as small and of as little mass as possible and shall be packed in a suitable compact form. Except where otherwise stated, the normal equipment of every lifeboat shall consist of:

(i) sufficient buoyant oars to make headway in calm seas. Thole pins, crutches or equivalent arrangements shall be provided for each oar provided. Thole pins or crutches shall be attached to the boat by lanyards or chains;

(ii) two boat-hooks;

(iii) a buoyant bailer and two buckets;

(iv) a survival manual;[39]

(v) a binnacle containing an efficient compass which is luminous or provided with suitable means of illumination. In a totally enclosed lifeboat, the binnacle shall be permanently fitted at the steering position; in any other lifeboat, it shall be provided with suitable mounting arrangements;

(vi) a sea-anchor of adequate size fitted with a shock-resistant hawser and a tripping line which provides a firm hand grip when wet. The strength of the sea-anchor, hawser and tripping line shall be adequate for all sea conditions;

(vii) two efficient painters of a length equal to not less than twice the distance from the stowage position of the lifeboat to the waterline in the lightest seagoing condition or 15 m, whichever is the greater. One painter attached to the release device required by paragraph (7)(g) shall be placed at the forward end of the lifeboat and the other shall be firmly secured at or near the bow of the lifeboat ready for use;

(viii) two hatchets, one at each end of the lifeboat;

(ix) watertight receptacles containing a total of 3 *l* of fresh water for each person the lifeboat is permitted to accommodate, of which 1 *l* per person may be replaced by a de-salting apparatus capable of producing an equal amount of fresh water in two days;

(x) a rustproof dipper with lanyard;

(xi) a rustproof graduated drinking vessel;

---

39 See the *Instructions for action in survival craft*, adopted by the Organization by resolution A.657(16).

(xii) a food ration totalling not less than 10,000 kJ for each person the lifeboat is permitted to accommodate; these rations shall be kept in airtight packaging and be stowed in a watertight container;

(xiii) four rocket parachute flares complying with the requirements of regulation 29;

(xiv) six hand flares complying with the requirements of regulation 30;

(xv) two buoyant smoke signals complying with the requirements of regulation 31;

(xvi) one waterproof electric torch suitable for Morse signalling together with one spare set of batteries and one spare bulb in a waterproof container;

(xvii) one daylight signalling mirror with instructions for its use for signalling to ships and aircraft;

(xviii) one copy of the life-saving signals prescribed by regulation V/8 of the International Convention for the Safety of Life at Sea, 1974, on a waterproof card or in a waterproof container;

(xix) one whistle or equivalent sound signal;

(xx) a first-aid outfit in a waterproof case capable of being closed tightly after use;

(xxi) six doses of anti-seasickness medicine and one seasickness bag for each person;

(xxii) a jack-knife to be kept attached to the boat by a lanyard;

(xxiii) three tin-openers;

(xxiv) two buoyant rescue quoits, attached to not less than 30 m of buoyant line;

(xxv) a manual pump;

(xxvi) one set of fishing tackle;

(xxvii) sufficient tools for minor adjustments to the engine and its accessories;

(xxviii) portable fire-extinguishing equipment suitable for extinguishing oil fires;

(xxix) a searchlight capable of effectively illuminating a light-coloured object at night, having a width of 18 m at a distance of 180 m for a total period of 6 h and of working for not less than 3 h continuously;

(xxx) an efficient radar reflector, unless a survival craft radar transponder is stowed in the lifeboat;

(xxxi) thermal protective aids complying with the requirements of regulation 26 sufficient for 10% of the number of persons the lifeboat is permitted to accommodate or two, whichever is greater; and

(xxxii) in the case of vessels engaged on voyages of such a nature and duration that, in the opinion of the Administration, the items specified in subparagraphs (xii) and (xxvi) are unnecessary, the Administration may allow these items to be dispensed with.

(9) Lifeboat markings

(a) The dimension of the lifeboat and the number of persons which it is permitted to accommodate shall be marked on it in clear permanent characters.

(b) The name and port of registry of the vessel to which the lifeboat belongs shall be marked on each side of the lifeboat's bow in block capitals of the Roman alphabet.

(c) Means of identifying the vessel to which the lifeboat belongs and the number of the lifeboat shall be marked in such a way that they are, as far as practicable, visible from above.

Regulation 18
Self-righting partially enclosed lifeboats

(1) Self-righting partially enclosed lifeboats shall comply with the requirements of regulation 17 and, in addition, shall comply with the requirements of this regulation.

(2) Enclosure

(a) Permanently attached rigid covers shall be provided extending over not less than 20% of the length of the lifeboat from the stem and not less than 20% of the length of the lifeboat from the aftermost part of the lifeboat.

(b) The rigid covers shall form two shelters. If the shelters have bulkheads, they shall have openings of sufficient size to permit easy access by persons each wearing an immersion suit or warm clothes and a lifejacket. The interior height of the shelters shall be sufficient to permit persons easy access to their seats in the bow and stern of the lifeboat.

(c) The rigid covers shall be so arranged that they include windows or translucent panels to admit sufficient daylight to the inside of the lifeboat with the openings or canopies closed so as to make artificial light unnecessary.

(d) The rigid covers shall have railings to provide a secure handhold for persons moving about the exterior of the lifeboat.

(e) Open parts of the lifeboat shall be fitted with a permanently attached foldable canopy so arranged that:

(i) it can be easily erected by not more than two persons in not more than 2 min; and

(ii) it is insulated to protect the occupants against cold by means of not less than two layers of material separated by an air gap or other equally efficient means.

(f) The enclosure formed by the rigid covers and canopy shall be so arranged:

(i) as to allow launching and recovery operations to be performed without any occupant having to leave the enclosure;

(ii) that it has entrances at both ends and on each side, provided with efficient adjustable closing arrangements which can be easily and quickly opened and closed from inside or outside so as to permit ventilation but exclude seawater, wind and cold; means shall be provided for holding the entrances securely in the open and in the closed position;

(iii) that with the canopy erected and all entrances closed, sufficient air is admitted for the occupants at all times;

(iv) that it has means for collecting rainwater;

(v) that the exterior of the rigid covers and canopy and the interior of that part of the lifeboat covered by the canopy is of a highly visible colour. The interior of the shelters shall be of a colour which does not cause discomfort to the occupants;

(vi) that it is possible to row the lifeboat.

(3) Capsizing and re-righting

(a) A safety belt shall be fitted at each indicated seating position. The safety belt shall be so designed as to hold a person of a mass of 100 kg securely in place when the lifeboat is in a capsized position.

(b) The stability of the lifeboat shall be such that it is inherently or automatically self-righting when loaded with its full or a partial complement of persons and equipment and the persons are secured with safety belts.

(4) Propulsion

(a) The engine and transmission shall be controlled from the helmsman's position.

(b) The engine and engine installation shall be capable of running in any position during capsize and continue to run after the lifeboat returns to the upright or shall automatically stop on capsizing and be easily restarted after the lifeboat returns to the upright and the water has been drained from the lifeboat. The design of the fuel and lubricating systems shall prevent the loss of fuel and the loss of more than 250 ml of lubricating oil from the engine during capsize.

(c) Air-cooled engines shall have a duct system to take in cooling air from, and exhaust it to, the outside of the lifeboat. Manually operated dampers shall be provided to enable cooling air to be taken in from, and exhausted to, the interior of the lifeboat.

(5) Construction and fendering

(a) Notwithstanding regulation 17(1)(f), a self-righting partially enclosed lifeboat shall be so constructed and fendered as to ensure that the lifeboat renders protection against harmful accelerations resulting from an impact of the lifeboat, when loaded with its full complement of persons and equipment, against the vessel's side at an impact velocity of not less than 3.5 m/s.

(b) The lifeboat shall be automatically self-bailing.

Regulation 19
Totally enclosed lifeboats

(1) Totally enclosed lifeboats shall comply with the requirements of regulation 17 and, in addition, shall comply with the requirements of this regulation.

(2) Enclosure

Every totally enclosed lifeboat shall be provided with a rigid watertight enclosure which completely encloses the lifeboat. The enclosure shall be so arranged that:

(i) it protects the occupants against heat and cold;

(ii) access to the lifeboat is provided by hatches which can be closed to make the lifeboat watertight;

(iii) hatches are positioned so as to allow launching and recovery operations to be performed without any occupant having to leave the enclosure;

(iv) access hatches are capable of being opened and closed from both inside and outside and are equipped with means to hold them securely in open positions;

(v) it is possible to row the lifeboat;

(vi) it is capable, when the lifeboat is in the capsized position with the hatches closed and without significant leakage, of supporting the entire mass of the lifeboat, including all equipment, machinery and its full complement of persons;

(vii) it includes windows or translucent panels on both sides which admit sufficient daylight to the inside of the lifeboat with the hatches closed to make artificial light unnecessary;

(viii) its exterior is of a highly visible colour and its interior of a colour which does not cause discomfort to the occupants;

(ix) handrails provide a secure handhold for persons moving about the exterior of the lifeboat, and aid embarkation and disembarkation;

(x) persons have access to their seats from an entrance without having to climb over thwarts or other obstructions;

(xi) the occupants are protected from the effects of dangerous subatmospheric pressures which might be created by the lifeboat's engine.

(3) Capsizing and re-righting

(a) A safety belt shall be fitted at each indicated seating position. The safety belt shall be designed to hold a person of a mass of 100 kg securely in place when the lifeboat is in a capsized position.

(b) The stability of the lifeboat shall be such that it is inherently or automatically self-righting when loaded with its full or a partial complement of persons and equipment and all entrances and openings are closed watertight and the persons are secured with safety belts.

(c) The lifeboat shall be capable of supporting its full complement of persons and equipment when the lifeboat is in the damaged condition prescribed in regulation 17(1)(a) and its stability shall be such that, in the event of capsizing, it will automatically attain a position that will provide an above-water escape for its occupants.

(d) The design of all engine exhaust pipes, air ducts and other openings shall be such that water is excluded from the engine when the lifeboat capsizes and re-rights.

(4) Propulsion

(a) The engine and transmission shall be controlled from the helmsman's position.

(b) The engine and engine installation shall be capable of running in any position during capsize and continue to run after the lifeboat returns to the upright or shall automatically stop on capsizing and be easily restarted after the lifeboat returns to the upright. The design of the fuel and lubricating systems shall prevent the loss of fuel and the loss of more than 250 ml of lubricating oil from the engine during capsize.

(c) Air-cooled engines shall have a duct system to take in cooling air from, and exhaust it to, the outside of the lifeboat. Manually operated dampers shall be provided to enable cooling air to be taken in from, and exhausted to, the interior of the lifeboat.

(5) Construction and fendering

Notwithstanding regulation 17(1)(f), a totally enclosed lifeboat shall be so constructed and fendered as to ensure that the lifeboat renders protection against harmful accelerations resulting from an impact of the lifeboat, when loaded with its full complement of persons and equipment, against the vessel's side at an impact velocity of not less than 3.5 m/s.

(6) Free-fall lifeboats

A lifeboat arranged for free-fall launching shall be so constructed that it is capable of rendering protection against harmful accelerations resulting from being launched, when loaded with its full complement of persons and equipment, from at least the maximum height at which it is designed to be stowed above the waterline with the vessel in its lightest seagoing condition, under unfavourable conditions of trim of up to 10° and with the vessel listed not less than 20° either way.

Regulation 20
General requirements for liferafts

(1) Construction of liferafts

(a) Every liferaft shall be so constructed as to be capable of withstanding exposure for 30 days afloat in all sea conditions.

(b) The liferaft shall be so constructed that when it is dropped into the water from a height of 18 m, the liferaft and its equipment will operate satisfactorily. If the liferaft is to be stowed at a height of more than 18 m above the waterline in the lightest seagoing condition, it shall be of a type which has been satisfactorily drop-tested from at least that height.

(c) The floating liferaft shall be capable of withstanding repeated jumps on to it from a height of at least 4.5 m above its floor both with and without the canopy erected.

(d) The liferaft and its fittings shall be so constructed as to enable it to be towed at a speed of 3 knots in calm water when loaded with its full complement of persons and equipment and with one of its sea-anchors streamed.

(e) The liferaft shall have a canopy to protect the occupants from exposure which is automatically set in place when the liferaft is launched and waterborne. The canopy shall comply with the following:

(i) it shall provide insulation against heat and cold by means of either two layers of material separated by an air gap or other equally efficient means. Means shall be provided to prevent accumulation of water in the air gap;

(ii) its interior shall be of a colour that does not cause discomfort to the occupants;

(iii) each entrance shall be clearly indicated and be provided with efficient adjustable closing arrangements which can be easily and quickly opened from inside and outside the liferaft so as to permit ventilation but exclude seawater, wind and cold. Liferafts accommodating more than eight persons shall have at least two diametrically opposite entrances;

(iv) it shall admit sufficient air for the occupants at all times, even with the entrances closed;

(v) it shall be provided with at least one viewing port;

(vi) it shall be provided with means for collecting rainwater;

(vii) it shall have sufficient headroom for sitting occupants under all parts of the canopy.

(2) Minimum carrying capacity and mass of liferafts

(a) No liferaft shall be approved which has a carrying capacity of less than six persons calculated in accordance with the requirements of regulation 21(3) or 22(3) as appropriate.

(b) Unless the liferaft is to be launched by an approved launching appliance complying with the requirements of regulation 32 and is not required to be portable, the total mass of the liferaft, its container and its equipment shall not be more than 185 kg.

(3) Liferaft fittings

(a) Lifelines shall be securely becketed around the inside and outside of the liferaft.

(b) The liferaft shall be fitted with an efficient painter of length equal to not less than twice the distance from the stowed position to the waterline in the lightest seagoing condition or 15 m whichever is the greater.

(4) Davit-launched liferafts

(a) In addition to the above requirements, a liferaft for use with an approved launching appliance shall:

(i) when the liferaft is loaded with its full complement of persons and equipment, be capable of withstanding a lateral impact against the vessel's side at an impact velocity of not less than 3.5 m/s and also a drop into the water from a height of not less than 3 m without damage that will affect its function;

(ii) be provided with means for bringing the liferaft alongside the embarkation deck and holding it securely during embarkation.

(b) Every davit-launched liferaft shall be so arranged that it can be boarded by its full complement of persons in not more than 3 min from the time the instruction to board is given.

(5) Equipment

(a) The normal equipment of every liferaft shall consist of:

(i) one buoyant rescue quoit, attached to not less than 30 m of buoyant line;

(ii) one knife of the non-folding type having a buoyant handle and lanyard attached and stowed in a pocket on the exterior of the canopy near the point at which the painter is attached to the liferaft. In addition, a liferaft which is permitted to accommodate 13 persons or more shall be provided with a second knife which need not be of the non-folding type;

(iii) for a liferaft which is permitted to accommodate not more than 12 persons, one buoyant bailer. For a liferaft which is permitted to accommodate 13 persons or more, two buoyant bailers;

(iv) two sponges;

(v) two sea-anchors each with a shock-resistant hawser and tripping line, one being spare and the other permanently attached to the liferaft in such a way that when the liferaft inflates or is waterborne it will cause the liferaft to lie oriented to the wind in the most stable manner. The strength of each sea-anchor and its hawser and tripping line shall be adequate for all sea conditions. The sea-anchors shall be fitted with a swivel at each end of the line and shall be of a type which is unlikely to turn inside-out between its shroud lines;

(vi) two buoyant paddles;

(vii) three tin-openers; safety knives containing special tin-opener blades are satisfactory for this requirement;

(viii) one first-aid outfit in a waterproof case capable of being closed tightly after use;

(ix) one whistle or equivalent sound signal;

(x) four rocket parachute flares complying with the requirements of regulation 29;

(xi) six hand flares complying with the requirements of regulation 30;

(xii) two buoyant smoke signals complying with the requirements of regulation 31;

(xiii) one waterproof electric torch suitable for Morse signalling together with one spare set of batteries and one spare bulb in a waterproof container;

(xiv) an efficient radar reflector, unless a survival craft radar transponder is stowed in the liferaft;

(xv) one daylight signalling mirror with instructions on its use for signalling to ships and aircraft;

(xvi) one copy of the life-saving signals referred to in regulation V/8 of the International Convention for the Safety of Life at Sea, 1974, on a waterproof card or in a waterproof container;

(xvii) one set of fishing tackle;

(xviii) a food ration totalling not less than 10,000 kJ for each person the liferaft is permitted to accommodate; these rations shall be kept in airtight packaging and be stowed in a watertight container;

(xix) watertight receptacles containing a total of 1.5 *l* of fresh water for each person the liferaft is permitted to accommodate, of which 0.5 *l* per person may be replaced by a de-salting apparatus capable of producing an equal amount of fresh water in two days;

(xx) one rustproof graduated drinking vessel;

(xxi) six doses of anti-seasickness medicine and one seasickness bag for each person the liferaft is permitted to accommodate;

(xxii) instructions on how to survive;[40]

(xxiii) instructions for immediate action;[40]

(xxiv) thermal protective aids complying with the requirements of regulation 26 sufficient for 10% of the number of persons the liferaft is permitted to accommodate or two, whichever is the greater.

(b) The marking required by regulations 21(7)(c)(v) and 22(7)(vii) on liferafts equipped in accordance with subparagraph (a) shall be SOLAS A PACK in block capitals of the Roman alphabet.

(c) Where appropriate the equipment shall be stowed in a container which, if it is not an integral part of, or permanently attached to, the liferaft, shall be stowed and secured inside the liferaft and be capable of floating in water for at least 30 min without damage to its contents.

(6) Float-free arrangements for liferafts

(a) Painter system

The liferaft painter system shall provide a connection between the vessel and the liferaft and shall be so arranged as to ensure that the liferaft when released and, in the case of an inflatable liferaft, inflated is not dragged under by the sinking vessel.

(b) Weak link

If a weak link is used in the float-free arrangements, it shall:

(i) not be broken by the force required to pull the painter from the liferaft container;

(ii) if applicable, be of sufficient strength to permit the inflation of the liferaft;

(iii) break under a strain of 2.2 ± 0.4 kN.

(c) Hydrostatic release units

If a hydrostatic release unit is used in the float-free arrangements, it shall:

(i) be constructed of compatible materials so as to prevent malfunction of the unit. Galvanizing or other forms of metallic coating on parts of the hydrostatic release unit shall not be accepted;

---

40 See the *Instructions for action in survival craft*, adopted by the Organization by resolution A.657(16).

(ii) automatically release the liferaft at a depth of not more than 4 m;

(iii) have drains to prevent the accumulation of water in the hydrostatic chamber when the unit is in its normal position;

(iv) be so constructed as to prevent release when seas wash over the unit;

(v) be permanently marked on its exterior with its type and serial number;

(vi) be provided with a document or identification plate stating the date of manufacture, type and serial number;

(vii) be such that each part connected to the painter system has a strength of not less than that required for the painter;

(viii) if disposable, have instructions for determining the date of expiry and means for marking the date on the unit.

Regulation 21
Inflatable liferafts

(1) Inflatable liferafts shall comply with the requirements of regulation 20 and, in addition, shall comply with the requirements of this regulation.

(2) Construction of inflatable liferafts

(a) The main buoyancy chamber shall be divided into not less than two separate compartments, each inflated through a non-return inflation valve on each compartment. The buoyancy chambers shall be so arranged that, in the event of any one of the compartments being damaged or failing to inflate, the intact compartments shall be able to support, with positive freeboard over the liferaft's entire periphery, the number of persons which the liferaft is permitted to accommodate, each having a mass of 75 kg and seated in their normal positions.

(b) The floor of the liferaft shall be waterproof and shall be capable of being sufficiently insulated against cold either:

(i) by means of one or more compartments that the occupants can inflate, or which inflate automatically and can be deflated and re-inflated by the occupants; or

(ii) by other equally efficient means not dependent on inflation.

(c) The liferaft shall be inflated with a non-toxic gas. Inflation shall be completed within a period of 1 min at an ambient temperature of between 18°C and 20°C and within a period of 3 min at an ambient temperature of -30°C. After inflation, the liferaft shall maintain its form when loaded with its full complement of persons and equipment.

(d) Each inflatable compartment shall be capable of withstanding a pressure equal to at least three times the working pressure and shall be prevented from reaching a pressure exceeding twice the working pressure either by

means of relief valves or by a limited gas supply. Means shall be provided for fitting the topping-up pump or bellows required by paragraph (10)(a)(ii) so that the working pressure can be maintained.

(3) Carrying capacity of inflatable liferafts

The number of persons which a liferaft shall be permitted to accommodate shall be equal to the lesser of:

(i) the greatest whole number obtained by dividing by 0.096 the volume, measured in cubic metres, of the main buoyancy tubes (which for this purpose shall include neither the arches nor the thwarts, if fitted) when inflated; or

(ii) the greatest whole number obtained by dividing by 0.372 the inner horizontal cross-sectional area of the liferaft measured in square metres (which for this purpose may include the thwart or thwarts, if fitted) measured to the innermost edge of the buoyancy tubes; or

(iii) the number of persons having an average mass of 75 kg all wearing lifejackets, that can be seated with sufficient comfort and headroom without interfering with the operation of any of the liferaft's equipment.

(4) Access into inflatable liferafts

(a) At least one entrance shall be fitted with a semi-rigid boarding ramp to enable persons to board the liferaft from the sea so arranged as to prevent significant deflation of the liferaft if the ramp is damaged. In the case of a davit-launched liferaft having more than one entrance, the boarding ramp shall be fitted at the entrance opposite the bowsing lines and embarkation facilities.

(b) Entrances not provided with a boarding ramp shall have a boarding ladder, the lowest step of which shall be situated not less than 0.4 m below the liferaft's light waterline.

(c) There shall be means inside the liferaft to assist persons to pull themselves into the liferaft from the ladder.

(5) Stability of inflatable liferafts

(a) Every inflatable liferaft shall be so constructed that, when fully inflated and floating with the canopy uppermost, it is stable in a seaway.

(b) The stability of the liferaft when in the inverted position shall be such that it can be righted in a seaway and in calm water by one person.

(c) The stability of the liferaft when loaded with its full complement of persons and equipment shall be such that it can be towed at speeds of up to 3 knots in calm water.

(6) Inflatable liferaft fittings

(a) The breaking strength of the painter system including its means of attachment to the liferaft, except the weak link required by regulation 20(6)(b), shall be not less than 10 kN for a liferaft permitted to accommodate nine persons or more, and not less than 7.5 kN for any other liferaft. The liferaft shall be capable of being inflated by one person.

(b) A manually controlled lamp visible on a dark night with a clear atmosphere at a distance of at least 2 miles for a period of not less than 12 h shall be fitted to the top of the liferaft canopy. If it is a flashing light, it shall flash at a rate of not less than 50 flashes per minute for the first 2 h of operation of the 12-hour operating period. The lamp shall be powered by a sea-activated cell or a dry chemical cell and shall light automatically when the liferaft inflates. The cell shall be of a type that does not deteriorate due to damp or humidity in the stowed liferaft.

(c) A manually controlled lamp shall be fitted inside the liferaft capable of continuous operation for a period of at least 12 h. It shall light automatically when the liferaft inflates and be of sufficient intensity to enable reading of survival and equipment instructions.

(7) Containers for inflatable liferafts

(a) The liferaft shall be packed in a container that is:

(i) so constructed as to withstand hard wear under conditions encountered at sea;

(ii) of sufficient inherent buoyancy, when packed with the liferaft and its equipment, to pull the painter from within and to operate the inflation mechanism should the vessel sink;

(iii) as far as practicable watertight, except for drain holes in the container bottom.

(b) The liferaft shall be packed in its container in such a way as to ensure, as far as possible, that the waterborne liferaft inflates in an upright position on breaking free from its container.

(c) The container shall be marked with:

(i) maker's name or trade mark;

(ii) serial number;

(iii) name of approving authority and the number of persons it is permitted to carry;

(iv) SFV;[41]

---

41 Inflatable liferafts complying with section 4.3 of the *International Life-Saving Appliance (LSA) Code*, adopted by the Maritime Safety Committee of the Organization by resolution MSC.48(66), as amended, and marked SOLAS A are fully equivalent to the liferafts described in this regulation, and may be accepted as fully equivalent to liferafts marked SFV.

(v) type of emergency pack enclosed;

(vi) date when last serviced;

(vii) length of painter;

(viii) maximum permitted height of stowage above waterline (depending on drop-test height and length of painter);

(ix) launching instructions.

(8) Markings on inflatable liferafts

The liferaft shall be marked with:

(i) maker's name or trade mark;

(ii) serial number;

(iii) date of manufacture (month and year);

(iv) name of approving authority;

(v) name and place of servicing station where it was last serviced;

(vi) number of persons it is permitted to accommodate over each entrance in characters not less than 100 mm in height of a colour contrasting with that of the liferaft.

(9) Davit-launched inflatable liferafts

(a) In addition to complying with the above requirements, a liferaft for use with an approved launching appliance shall, when suspended from its lifting hook or bridle, withstand a load of:

(i) 4 times the mass of its full complement of persons and equipment, at an ambient temperature and a stabilized liferaft temperature of 20±3°C with all relief valves inoperative; and

(ii) 1.1 times the mass of its full complement of persons and equipment at an ambient temperature and a stabilized liferaft temperature of -30°C with all relief valves operative.

(b) Rigid containers for liferafts to be launched by a launching appliance shall be so secured that the container or parts of it are prevented from falling into the sea during and after inflation and launching of the contained liferaft.

(10) Additional equipment for inflatable liferafts

(a) In addition to the equipment required by regulation 20(5), every inflatable liferaft shall be provided with:

(i) one repair outfit for repairing punctures in buoyancy compartments;

(ii) one topping-up pump or bellows.

(b) The knives required by regulation 20(5)(a)(ii) shall be safety knives.

Regulation 22
Rigid liferafts

(1) Rigid liferafts shall comply with the requirements of regulation 20 and, in addition, shall comply with the requirements of this regulation.

(2) Construction of rigid liferafts

(a) The buoyancy of the liferaft shall be provided by approved inherently buoyant material placed as near as possible to the periphery of the liferaft. The buoyant material shall be fire-retardant or be protected by a fire-retardant covering.

(b) The floor of the liferaft shall prevent the ingress of water and shall effectively support the occupants out of the water and insulate them from cold.

(3) Carrying capacity of rigid liferafts

The number of persons which a liferaft shall be permitted to accommodate shall be equal to the lesser of:

(i) the greatest whole number obtained by dividing by 0.096 the volume, measured in cubic metres, of the buoyancy material multiplied by a factor of 1 minus the specific gravity of that material; or

(ii) the greatest whole number obtained by dividing by 0.372 the horizontal cross-sectional area of the floor of the liferaft measured in square metres; or

(iii) the number of persons having an average mass of 75 kg all wearing lifejackets, that can be seated with sufficient comfort and headroom without interfering with the operation of any of the liferaft's equipment.

(4) Access into rigid liferafts

(a) At least one entrance shall be fitted with a rigid boarding ramp to enable persons to board the liferaft from the sea. In the case of a davit-launched liferaft having more than one entrance, the boarding ramp shall be fitted at the entrance opposite to the bowsing and embarkation facilities.

(b) Entrances not provided with a boarding ramp shall have a boarding ladder, the lowest step of which shall be situated not less than 0.4 m below the liferaft's light waterline.

(c) There shall be means inside the liferaft to assist persons to pull themselves into the liferaft from the ladder.

(5) Stability of rigid liferafts

(a) Unless the liferaft is capable of operating safely whichever way up it is floating, its strength and stability shall be such that it is either self-righting or can be readily righted in a seaway and in calm water by one person.

(b) The stability of the liferaft when loaded with its full complement of persons and equipment shall be such that it can be towed at speeds of up to 3 knots in calm water.

(6) Rigid liferaft fittings

(a) The liferaft shall be fitted with an efficient painter. The breaking strength of the painter system, including its means of attachment to the liferaft, except the weak link required by regulation 20(6)(b), shall be not less than 10 kN for liferafts permitted to accommodate nine persons or more, and not less than 7.5 kN for any other liferaft.

(b) A manually controlled lamp visible on a dark night with a clear atmosphere at a distance of at least 2 miles for a period of not less than 12 h shall be fitted to the top of the liferaft canopy. If the light is a flashing light, it shall flash at a rate of not less than 50 flashes per minute for the first 2 h of operation of the 12-hour operating period. The lamp shall be powered by a sea-activated cell or a dry chemical cell and shall light automatically when the liferaft canopy is set in place. The cell shall be of a type that does not deteriorate due to damp or humidity in the stowed liferaft.

(c) A manually controlled lamp shall be fitted inside the liferaft, capable of continuous operation for a period of at least 12 h. It shall light automatically when the canopy is set in place and be of sufficient intensity to enable reading of survival and equipment instructions.

(7) Markings on rigid liferafts

The liferafts shall be marked with:

(i) name and port of registry of the vessel to which it belongs;

(ii) maker's name or trade mark;

(iii) serial number;

(iv) name of approving authority;

(v) number of persons it is permitted to accommodate over each entrance in characters not less than 100 mm in height of a colour contrasting with that of the liferaft;

(vi) SFV;[42]

---

42 Rigid liferafts complying with chapter IV, section 4.3 of the *International Life-Saving Appliance (LSA) Code*, adopted by the Maritime Safety Committee of the Organization by resolution MSC.48(66), as amended, and marked SOLAS A are fully equivalent to the liferafts described in this regulation and may be accepted as fully equivalent to liferafts marked SFV.

(vii) type of emergency pack enclosed;

(viii) length of painter;

(ix) maximum permitted height of stowage above waterline (drop-test height);

(x) launching instructions.

(8) Davit-launched rigid liferafts

In addition to the above requirements, a rigid liferaft for use with an approved launching appliance shall, when suspended from its lifting hook or bridle, withstand a load of four times the mass of its full complement of persons and equipment.

Regulation 23
Rescue boats

(1) General requirements

(a) Except as provided by this regulation, all rescue boats shall comply with the requirements of regulations 17(1) to 17(7)(d) inclusive and 17(7)(f), 17(7)(g), 17(7)(i), 17(7)(l) and 17(9).

(b) Rescue boats may be either of rigid or inflated construction or a combination of both and shall:

(i) be not less than 3.8 m and not more than 8.5 m in length, except where, owing to the size of the vessel, or for other reasons where the carriage of such boats is considered unreasonable or impracticable, the Administration may accept a rescue boat of a lesser length but not less than 3.3 m;

(ii) be capable of carrying at least five seated persons and a person lying down or, in the case of a rescue boat less than 3.8 m in length, such lesser number as may be determined by the Administration.

(c) The number of persons which a boat shall be permitted to accommodate shall be determined by the Administration.

(d) Rescue boats which are a combination of rigid and inflated construction shall comply with the appropriate requirements of this regulation to the satisfaction of the Administration.

(e) Unless the rescue boat has adequate sheer, it shall be provided with a bow cover extending for not less than 15% of its length.

(f) Rescue boats shall be capable of manoeuvring at speeds up to 6 knots and maintaining that speed for a period of at least 4 h.

(g) Rescue boats shall have sufficient mobility and manoeuvrability in a seaway to enable persons to be retrieved from the water, marshal liferafts and tow the largest liferaft carried on the vessel when loaded with its full complement of persons and equipment or its equivalent at a speed of at least 2 knots.

(h) A rescue boat shall be fitted with an inboard engine or outboard motor. If it is fitted with an outboard motor, the rudder and tiller may form part of the engine. Notwithstanding the requirements of regulation 17(6)(a), petrol-driven outboard engines with an approved fuel system may be fitted in rescue boats, provided the fuel tanks are specially protected against fire and explosion.

(i) Arrangements for towing shall be permanently fitted in rescue boats and shall be sufficiently strong to marshal or tow liferafts as required by paragraph (1)(g).

(j) Rescue boats shall be fitted with weathertight stowage for small items of equipment.

(2) Rescue boat equipment

(a) All items of rescue boat equipment, with the exception of boat-hooks which shall be kept free for fending off purposes, shall be secured within the rescue boat by lashings, storage in lockers or compartments, storage in brackets or similar mounting arrangements, or other suitable means. The equipment shall be secured in such a manner as not to interfere with any launching or recovery procedures. All items of rescue boat equipment shall be as small and of as little mass as possible and shall be packed in suitable and compact form.

(b) The normal equipment of every rescue boat shall consist of:

(i) sufficient buoyant oars or paddles to make headway in calm seas. Thole pins, crutches or equivalent arrangements shall be provided for each oar. Thole pins or crutches shall be attached to the boat by lanyards or chains;

(ii) a buoyant bailer;

(iii) a binnacle containing an efficient compass which is luminous or provided with suitable means of illumination;

(iv) a sea-anchor and tripping line with a hawser of adequate strength not less than 10 m in length;

(v) a painter of sufficient length and strength, attached to the release device complying with the requirements of regulation 17(7)(g) and placed at the forward end of the rescue boat;

(vi) one buoyant line, not less than 50 m in length, of sufficient strength to tow a liferaft as required by paragraph (1)(g);

(vii) one waterproof electric torch suitable for Morse signalling, together with one spare set of batteries and one spare bulb in a waterproof container;

(viii) one whistle or equivalent sound signal;

(ix) a first-aid outfit in a waterproof case capable of being closed tightly after use;

(x) two buoyant rescue quoits, attached to not less than 30 m of buoyant line;

(xi) a searchlight capable of effectively illuminating a light-coloured object at night having a width of 18 m at a distance of 180 m for a total period of 6 h and of working for at least 3 h continuously;

(xii) an efficient radar reflector;

(xiii) thermal protective aids complying with the requirements of regulation 26 sufficient for 10% of the number of persons the rescue boat is permitted to accommodate or two, whichever is the greater.

(c) In addition to the equipment required by paragraph (2)(b), the normal equipment of every rigid rescue boat shall include:

(i) a boat-hook;

(ii) a bucket;

(iii) a knife or hatchet.

(d) In addition to the equipment required by paragraph (2)(b), the normal equipment of every inflated rescue boat shall consist of:

(i) a buoyant safety knife;

(ii) two sponges;

(iii) an efficient manually operated bellows or pump;

(iv) a repair kit in a suitable container for repairing punctures;

(v) a safety boat-hook.

(3) Additional requirements for inflated rescue boats

(a) The requirements of regulations 17(1)(c) and 17(1)(e) do not apply to inflated rescue boats.

(b) An inflated rescue boat shall be constructed in such a way that, when suspended by its bridle or lifting hook:

(i) it is of sufficient strength and rigidity to enable it to be lowered and recovered with its full complement of persons and equipment;

(ii) it is of sufficient strength to withstand a load of 4 times the mass of its full complement of persons and equipment at an ambient temperature of 20±3°C with all relief valves inoperative;

(iii) it is of sufficient strength to withstand a load of 1.1 times the mass of its full complement of persons and equipment at an ambient temperature of -30°C, with all relief valves operative.

(c) Inflated rescue boats shall be so constructed as to be capable of withstanding exposure:

(i) when stowed on an open deck on a vessel at sea;

(ii) for 30 days afloat in all sea conditions.

(d) In addition to complying with the requirements of regulation 17(9), inflated rescue boats shall be marked with a serial number, the maker's name or trade mark and the date of manufacture.

(e) The buoyancy of an inflated rescue boat shall be provided by either a single tube subdivided into at least five separate compartments of approximately equal volume or two separate tubes neither exceeding 60% of the total volume. The buoyancy tubes shall be so arranged that, in the event of any one of the compartments being damaged, the intact compartments shall be able to support the number of persons which the rescue boat is permitted to accommodate, each having a mass of 75 kg, when seated in their normal positions with positive freeboard over the rescue boat's entire periphery.

(f) The buoyancy tubes forming the boundary of the inflated rescue boat shall, on inflation, provide a volume of not less than 0.17 m^3 for each person the rescue boat is permitted to accommodate.

(g) Each buoyancy compartment shall be fitted with a non-return valve for manual inflation and means for deflation. A safety relief valve shall also be fitted, unless the Administration is satisfied that such an appliance is unnecessary.

(h) Underneath the bottom and on vulnerable places on the outside of the inflated rescue boat, rubbing strips shall be provided to the satisfaction of the Administration.

(i) Where a transom is fitted, it shall not be inset by more than 20% of the overall length of the rescue boat.

(j) Suitable patches shall be provided for securing the painters fore and aft and the becketed lifelines inside and outside the boat.

(k) The inflated rescue boat shall be maintained at all times in a fully inflated condition.

Regulation 24
Lifejackets

(1) General requirements for lifejackets

(a) A lifejacket shall not sustain burning or continue melting after being totally enveloped in a fire for a period of 2 s.

(b) A lifejacket shall be so constructed that:

(i) after demonstration, a person can correctly don it within a period of 1 min without assistance;

(ii) it is capable of being worn inside-out or is clearly capable of being worn in only one way and, as far as possible, cannot be donned incorrectly;

(iii) it is comfortable to wear;

(iv) it allows the wearer to jump from a height of at least 4.5 m into the water without injury and without dislodging or damaging the lifejacket.

(c) A lifejacket shall have sufficient buoyancy and stability in calm fresh water to:

(i) lift the mouth of an exhausted or unconscious person not less than 120 mm clear of the water with the body inclined backwards at an angle of not less than 20° and not more than 50° from the vertical position;

(ii) turn the body of an unconscious person in the water from any position to one where the mouth is clear of the water in not more than 5 s.

(d) A lifejacket shall have buoyancy which is not reduced by more than 5% after 24 h submersion in fresh water.

(e) A lifejacket shall allow the person wearing it to swim a short distance and to board a survival craft.

(f) Each lifejacket shall be fitted with a whistle firmly secured by a cord.

(2) Inflatable lifejackets

A lifejacket which depends on inflation for buoyancy shall have not less than two separate compartments and comply with the requirements of paragraph (1) and shall:

(i) inflate automatically on immersion, be provided with a device to permit inflation by a single manual motion and be capable of being inflated by mouth;

(ii) in the event of loss of buoyancy in any one compartment be capable of complying with the requirements of paragraphs (1)(b), (c) and (e);

(iii) comply with the requirements of paragraph (1)(d) after inflation by means of the automatic mechanism.

(3) Lifejacket lights

(a) Each lifejacket shall have a light which shall:

(i) have a luminous intensity of not less than 0.75 cd;

(ii) have a source of energy capable of providing a luminous intensity of 0.75 cd for a period of at least 8 h;

(iii) be visible over as great a segment of the upper hemisphere as is practicable when attached to a lifejacket.

(b) If the light referred to in paragraph (3)(a) is a flashing light, it shall, in addition:

(i) be provided with a manually operated switch;

(ii) not be fitted with a lens or curved reflector to concentrate the beam;

(iii) flash at a rate of not less than 50 flashes per minute with an effective luminous intensity of at least 0.75 cd.

Regulation 25
Immersion suits

(1) General requirements for immersion suits

(a) The immersion suit shall be constructed with waterproof materials such that:

(i) it can be unpacked and donned without assistance within 2 min taking into account any associated clothing, and a lifejacket if the immersion suit is to be worn in conjunction with a lifejacket;

(ii) it will not sustain burning or continue melting after being totally enveloped in a fire for a period of 2 s;

(iii) it will cover the whole body with the exception of the face. Hands shall also be covered, unless permanently attached gloves are provided;

(iv) it is provided with arrangements to minimize or reduce free air in the legs of the suit;

(v) following a jump from a height of not less than 4.5 m into the water, there is no undue ingress of water into the suit.

(b) An immersion suit which also complies with the requirements of regulation 24 may be classified as a lifejacket.

(c) An immersion suit shall permit the person wearing it, and also wearing a lifejacket if the immersion suit is to be worn in conjunction with a lifejacket, to:

(i) climb up and down a vertical ladder at least 5 m in length;

(ii) perform normal duties during abandonment;

(iii) jump from a height of not less than 4.5 m into the water without damaging or dislodging the immersion suit, or being injured;

(iv) swim a short distance through the water and board a survival craft.

(d) An immersion suit which has buoyancy and is designed to be worn without a lifejacket shall be fitted with a light complying with the requirements of regulation 24(3) and the whistle prescribed by regulation 24(1)(f).

(e) If the immersion suit is to be worn in conjunction with a lifejacket, the lifejacket shall be worn over the immersion suit. A person wearing such an immersion suit shall be able to don a lifejacket without assistance.

(2) Thermal performance requirements for immersion suits

(a) An immersion suit made of material which has no inherent insulation shall be:

(i) marked with instructions that it must be worn in conjunction with warm clothing;

(ii) so constructed that, when worn in conjunction with warm clothing and with a lifejacket if the immersion suit is to be worn with a lifejacket, the immersion suit continues to provide sufficient thermal protection following one jump by the wearer into the water from a height of 4.5 m to ensure that, when it is worn for a period of 1 h in calm circulating water at a temperature of 5°C, the wearer's body core temperature does not fall more than 2°C.

(b) An immersion suit made of material with inherent insulation when worn either on its own or with a lifejacket, if the immersion suit is to be worn in conjunction with a lifejacket, shall provide the wearer with sufficient thermal insulation following one jump into the water from a height of 4.5 m to ensure that the wearer's body core temperature does not fall more than 2°C after a period of 6 h immersion in calm circulating water at a temperature of between 0°C and 2°C.

(c) The immersion suit shall permit the person wearing it with hands covered to pick up a pencil and write after being immersed in water at 5°C for a period of 1 h.

(3) Buoyancy requirements

A person in fresh water wearing either an immersion suit complying with the requirements of regulation 24 or an immersion suit with a lifejacket shall be able to turn from a face-down to a face-up position in not more than 5 s.

Regulation 26
Thermal protective aids

(1) A thermal protective aid shall be made of waterproof material having a thermal conductivity of not more than 0.25 W/m.K and shall be so constructed that, when used to enclose a person, it shall reduce both the convective and evaporative heat loss from the wearer's body.

(2) The thermal protective aid shall:

(i) cover the whole body of a person wearing a lifejacket with the exception of the face. Hands shall also be covered, unless permanently attached gloves are provided;

(ii) be capable of being unpacked and easily donned without assistance in a survival craft or rescue boat;

(iii) permit the wearer to remove it in the water in not more than 2 min, if it impairs ability to swim.

(3) The thermal protective aid shall function properly throughout an air temperature range -30°C to +20°C.

Regulation 27
Lifebuoys

(1) Lifebuoy specification

Every lifebuoy shall:

(i) have an outer diameter of not more than 800 mm and an inner diameter of not less than 400 mm;

(ii) be constructed of inherently buoyant material; it shall not depend upon rushes, cork shavings or granulated cork, any other loose granulated material or any air compartment which depends on inflation for buoyancy;

(iii) be capable of supporting not less than 14.5 kg of iron in fresh water for a period of 24 h;

(iv) have a mass of not less than 2.5 kg;

(v) not sustain burning or continue melting after being totally enveloped in a fire for a period of 2 s;

(vi) be constructed to withstand a drop into the water from the height at which it is stowed above the waterline in the lightest seagoing condition or 30 m, whichever is the greater, without impairing either its operating capability or that of its attached components;

(vii) if it is intended to operate the quick-release arrangement provided for the self-activated smoke signals and self-igniting lights, have a mass sufficient to operate the quick-release arrangement or 4 kg, whichever is the greater;

(viii) be fitted with a grabline not less than 9.5 mm in diameter and not less than four times the outside diameter of the body of the buoy in length. The grabline shall be secured at four equidistant points around the circumference of the buoy to form four equal loops.

(2) Lifebuoy self-igniting lights

Self-igniting lights required by regulation 10(2) shall:

(i) be such that they cannot be extinguished by water;

(ii) be capable of either burning continuously with a luminous intensity of not less than 2 cd in all directions of the upper hemisphere or flashing (discharge flashing) at a rate of not less than 50 flashes per minute with at least the corresponding effective luminous intensity;

(iii) be provided with a source of energy capable of meeting the requirement of subparagraph (ii) for a period of at least 2 h;

(iv) be capable of withstanding the drop test required by paragraph (1)(vi).

(3) Lifebuoy self-activating smoke signals

Self-activating smoke signals required by regulation 10(3) shall:

(i) emit smoke of a highly visible colour at a uniform rate for a period of at least 15 min when floating in calm water;

(ii) not ignite explosively or emit any flame during the entire smoke emission time of the signal;

(iii) not be swamped in a seaway;

(iv) continue to emit smoke when fully submerged in water for a period of at least 10 s;

(v) be capable of withstanding the drop test required by paragraph (1)(vi).

(4) Buoyant lifelines

Buoyant lifelines required by regulation 10(4) shall;

(i) be non-kinking;

(ii) have a diameter of not less than 8 mm;

(iii) have a breaking strength of not less than 5 kN.

Regulation 28
Line-throwing appliances

(1) Every line-throwing appliance shall:

(i) be capable of throwing a line with reasonable accuracy;

(ii) include not less than four projectiles each capable of carrying the line at least 230 m in calm weather;

(iii) include not less than four lines each having a breaking strength of not less than 2kN;

(iv) have brief instructions or diagrams clearly illustrating the use of the line-throwing appliance.

(2) The rocket, in the case of a pistol-fired rocket, or the assembly, in the case of an integral rocket and line, shall be contained in a water-resistant casing. In addition, in the case of a pistol-fired rocket, the line and rockets together with the means of ignition shall be stowed in a container which provides protection from the weather.

Regulation 29
Rocket parachute flares

(1) The rocket parachute flare shall:

(i) be contained in a water-resistant casing;

(ii) have brief instructions or diagrams clearly illustrating the use of the rocket parachute flare printed on its casing;

(iii) have integral means of ignition;

(iv) be so designed as not to cause discomfort to the person holding the casing when used in accordance with the manufacturer's operating instructions.

(2) The rocket shall, when fired vertically, reach an altitude of not less than 300 m. At or near the top of its trajectory, the rocket shall eject a parachute flare which shall:

(i) burn with a bright red colour;

(ii) burn uniformly with an average luminous intensity of not less than 30,000 cd;

(iii) have a burning period of not less than 40 s;

(iv) have a rate of descent of not more than 5 m/s;

(v) not damage its parachute or attachments while burning.

Regulation 30
Hand flares

(1) The hand flare shall:

(i) be contained in a water-resistant casing;

(ii) have brief instructions or diagrams clearly illustrating the use of the hand flare printed on its casing;

(iii) have a self-contained means of ignition;

(iv) be so designed as not to cause discomfort to the person holding the casing and not endanger the survival craft by burning or glowing residues when used in accordance with the manufacturer's operating instructions.

(2) The hand flare shall:

(i) burn with a bright red colour;

(ii) burn uniformly with an average luminous intensity of not less than 15,000 cd;

(iii) have a burning period of not less than 1 min;

(iv) continue to burn after having been immersed for a period of 10 s under 100 mm of water.

Regulation 31
Buoyant smoke signals

(1) The buoyant smoke signal shall:

(i) be contained in a water-resistant casing;

(ii) not ignite explosively when used in accordance with the manufacturer's operating instructions;

(iii) have brief instructions or diagrams clearly illustrating the use of the buoyant smoke signal printed on its casing.

(2) The buoyant smoke signal shall:

(i) emit smoke of a highly visible colour at a uniform rate for a period of not less than 3 min when floating in calm water;

(ii) not emit any flame during the entire smoke emission time;

(iii) not be swamped in a seaway;

(iv) continue to emit smoke when submerged in water for a period of 10 s under 100 mm of water.

Regulation 32
Launching and embarkation appliances

(1) General requirements

(a) Each launching appliance together with all its lowering and recovery gear shall be so arranged that the fully equipped survival craft or rescue boat it serves can be safely lowered against a trim of up to 10° and a list of up to 20° either way:

(i) when boarded by its full complement of persons;

(ii) without persons in the survival craft or rescue boat.

(b) A launching appliance shall not depend on any means other than gravity or stored mechanical power which is independent of the vessel's power supplies to launch the survival craft or rescue boat it serves in the fully loaded and equipped condition and also in the light condition.

(c) A launching mechanism shall be so arranged that it may be actuated by one person from a position on the vessel's deck, and from a position within the survival craft or rescue boat; the survival craft shall be visible to the person on deck operating the launching mechanism.

(d) Each launching appliance shall be so constructed that a minimum amount of routine maintenance is necessary. All parts requiring regular maintenance by the vessel's crew shall be readily accessible and easily maintained.

(e) The winch brakes of a launching appliance shall be of sufficient strength to withstand:

(i) a static test with a proof load of not less than 1.5 times the maximum working load; and

(ii) a dynamic test with a proof load of not less than 1.1 times the maximum working load at maximum lowering speed.

(f) The launching appliance and its attachments other than winch brakes shall be of sufficient strength to withstand a static proof load on test of not less than 2.2 times the maximum working load.

(g) Structural members and all blocks, falls, padeyes, links, fastenings and all other fittings used in connection with launching equipment shall be designed with not less than a minimum factor of safety on the basis of the maximum working load assigned and the ultimate strength of the material used for construction. A minimum factor of safety of 4.5 shall be applied to all davit and winch structural members, and a minimum factor of safety of 6 shall be applied to falls, suspension chains, links and blocks.

(h) Each launching appliance shall, as far as practicable, remain effective under conditions of icing.

(i) A lifeboat launching appliance shall be capable of recovering the lifeboat with its crew.

(j) The arrangements of the launching appliance shall be such as to enable safe boarding of the survival craft in accordance with the requirements of regulations 20(4)(b) and 17(3)(a).

(2) Launching appliances using falls and a winch

(a) Falls shall be of rotation-resistant and corrosion-resistant steel wire rope.

(b) In the case of a multiple drum winch, unless an efficient compensatory device is fitted, the falls shall be so arranged as to wind off the drums at the same rate when lowering, and to wind on to the drums evenly at the same rate when hoisting.

(c) Every rescue boat launching appliance shall be fitted with a powered winch motor of such capacity that the rescue boat can be raised from the water with its full complement of persons and equipment.

(d) An efficient hand gear shall be provided for recovery of each survival craft and rescue boat. Hand gear handles or wheels shall not be rotated by moving parts of the winch when the survival craft or rescue boat is being lowered or when it is being hoisted by power.

(e) Where davit arms are recovered by power, safety devices shall be fitted which will automatically cut off the power before the davit arms reach the stops in order to avoid overstressing the falls or davits, unless the motor is designed to prevent such overstressing.

(f) The speed at which the survival craft or rescue boat is lowered into the water shall be not less than that obtained from the formula:

$S = 0.4 + 0.02H$

where:

S = speed of lowering, in metres per second; and
H = height, in metres, from davit head to the waterline in the lightest seagoing condition.

(g) The maximum lowering speed shall be established by the Administration having regard to the design of the survival craft or rescue boat, the protection of its occupants from excessive forces, and the strength of the launching arrangements taking into account inertia forces during an emergency stop. Means shall be incorporated in the appliance to ensure that this speed is not exceeded.

(h) Every rescue boat launching appliance shall be capable of hoisting the rescue boat when loaded with its full rescue boat complement of persons and equipment at a rate of not less than 0.3 m/s.

(i) Every launching appliance shall be fitted with brakes capable of stopping the descent of the survival craft or rescue boat and holding it securely when loaded with its full complement of persons and equipment; brake pads shall, where necessary, be protected from water and oil.

(j) Manual brakes shall be so arranged that the brake is always applied, unless the operator, or a mechanism activated by the operator, holds the brake control in the "off" position.

(3) Float-free launching

Where a survival craft requires a launching appliance and is also designed to float free, the float-free release of the survival craft from its stowed position shall be automatic.

(4) Free-fall launching

Every free-fall launching appliance using an inclined plane shall, in addition to complying with the applicable requirements of paragraph (1), also comply with the following requirements:

(i) the launching appliance shall be so arranged that excessive forces are not experienced by the occupants of the survival craft during launching;

(ii) the launching appliance shall be a rigid structure with a ramp angle and length sufficient to ensure that the survival craft effectively clears the vessel;

(iii) the launching appliance shall be efficiently protected against corrosion and be so constructed as to prevent incendive friction or impact sparking during the launching of the survival craft.

(5) Evacuation-slide launching and embarkation

Every evacuation-slide launching appliance shall, in addition to complying with the applicable requirements of paragraph (1), also comply with the following requirements:

(i) the evacuation slide shall be capable of being deployed by one person at the embarkation station;

(ii) the evacuation slide shall be capable of being used in high winds and in a seaway.

(6) Liferaft launching appliances

Every liferaft launching appliance shall comply with the requirements of paragraphs (1) and (2), except with regard to use of gravity for turning out the appliance, embarkation in the stowed position and recovery of the loaded liferaft. The launching appliance shall be so arranged as to prevent premature release during lowering and shall release the liferaft when waterborne.

(7) Embarkation ladders

(a) Handholds shall be provided to ensure a safe passage from the deck to the head of the ladder and vice versa.

(b) The steps of the ladder shall be:

(i) made of hardwood, free from knots or other irregularities, smoothly machined and free from sharp edges and splinters, or of suitable material of equivalent properties;

(ii) provided with an efficient non-slip surface either by longitudinal grooving or by the application of an approved non-slip coating;

(iii) not less than 480 mm long, 115 mm wide and 25 mm in depth, excluding any non-slip surface or coating;

(iv) equally spaced not less than 300 mm or more than 380 mm apart and secured in such a manner that they will remain horizontal.

(c) The side ropes of the ladder shall consist of two uncovered manila ropes not less than 65 mm in circumference on each side. Each rope shall be continuous with no joints below the top step. Other materials may be used, provided the dimensions, breaking strain, weathering, stretching and gripping properties are at least equivalent to those of manila rope. All rope ends shall be secured to prevent unravelling.

CHAPTER VIII
EMERGENCY PROCEDURES, MUSTERS AND DRILLS

Regulation 1
Application

Regulations of this chapter shall apply to new and existing vessels of 24 m in length and over.

Regulation 2
General emergency alarm system, muster list and emergency instructions

(1) The general emergency alarm system shall be capable of sounding the general alarm signal consisting of seven or more short blasts followed by one long blast on the vessel's whistle or siren and, additionally, on an electrically operated bell or klaxon or other equivalent warning system which shall be powered from the vessel's main supply and the emergency source of electrical power required by regulation IV/17.

(2) All vessels shall be provided with clear instructions for each crew member, which shall be followed in case of emergency.

(3) The muster list shall be posted up in several parts of the vessel and, in particular, in the wheelhouse, the engine-room and in the crew accommodation and shall include the information specified in the following paragraphs.

(4) The muster list shall specify details of the general alarm signal prescribed by paragraph (1) and also the action to be taken by the crew when this alarm is sounded. The muster list shall also specify how the order to abandon ship will be given.

(5) The muster list shall show the duties assigned to the different members of the crew including:

(a) closing of watertight doors, fire doors, valves, scuppers, overboard shoots, sidescuttles, skylights, portholes and other similar openings in the vessel;

(b) equipping the survival craft and other life-saving appliances;

(c) preparation and launching of survival craft;

(d) general preparation of other life-saving appliances;

(e) use of communication equipment; and

(f) manning of fire parties assigned to deal with fires.

(6) In vessels of less than 45 m in length, the Administration may permit relaxation of the requirements of paragraph (5) if satisfied that, due to the small number of crew members, no muster list is necessary.

(7) The muster list shall specify which officers are assigned to ensure that the life-saving and fire appliances are maintained in good condition and are ready for immediate use.

(8) The muster list shall specify substitutes for key persons who may become disabled, taking into account that different emergencies may call for different actions.

(9) The muster list shall be prepared before the vessel proceeds to sea. After the muster list has been prepared, if any change takes place in the crew which necessitates an alteration in the muster list, the skipper shall either revise the list or prepare a new list.

Regulation 3
Abandon ship training and drills

(1) Practice musters and drills

(a) Each member of the crew shall participate in at least one abandon ship drill and one fire drill every month. However, on vessels less than 45 m in length, the Administration may modify this requirement, provided that at least one abandon ship and one fire drill is held at least every three months. The drills of the crew shall take place within 24 h of the vessel leaving a port, if more than 25% of the crew have not participated in abandon ship and fire drills on board that particular vessel in the previous muster. The Administration may accept other arrangements that are at least equivalent for those classes of vessel for which this is impracticable.

(b) Each abandon ship drill shall include:

(i) summoning of crew to muster stations with the general emergency alarm and ensuring that they are made aware of the order to abandon ship specified in the muster list;

(ii) reporting to stations and preparing for the duties described in the muster list;

(iii) checking that crew are suitably dressed;

(iv) checking that lifejackets are correctly donned;

(v) lowering of at least one lifeboat after any necessary preparation for launching;

(vi) starting and operating the lifeboat engine;

(vii) operation of davits used for launching liferafts.

(c) Each fire drill shall include:

(i) reporting to stations and preparing for the duties described in the fire muster list;

(ii) starting of a fire pump, using at least the two required jets of water to show that the system is in proper working order;

(iii) checking of fireman's outfit and other personal rescue equipment;

(iv) checking of relevant communication equipment;

(v) checking the operation of watertight doors, fire doors, fire dampers and means of escape;

(vi) checking the necessary arrangements for subsequent abandoning of the vessel.

(d) Different lifeboats shall, as far as practicable, be lowered in compliance with the requirements of subparagraph (b)(v) at successive drills.

(e) Drills shall, as far as practicable, be conducted as if there were an actual emergency.

(f) Each lifeboat shall be launched with its assigned operating crew aboard and manoeuvred in the water at least once every three months during an abandon ship drill.

(g) As far as is reasonable and practicable, rescue boats other than lifeboats which are also rescue boats shall be launched each month with their assigned crew aboard and manoeuvred in the water. In all cases, this requirement shall be complied with at least once every three months.

(h) If lifeboat and rescue boat launching drills are carried out with the vessel making headway, such drills shall, because of the dangers involved, be practised in sheltered waters only and under the supervision of an officer experienced in such drills.[43]

(i) Emergency lighting for mustering and abandonment shall be tested at each abandon ship drill.

(j) The drills may be adjusted according to the relevant equipment required by those regulations. However, if equipment is carried on a voluntary basis, it shall be used in the drills and the drills shall be adjusted accordingly.

(2) Onboard training and instructions

(a) Onboard training in the use of the vessel's life-saving appliances, including survival craft equipment, shall be given as soon as possible but not later than two weeks after a crew member joins the vessel. However, if the crew member is on a regularly scheduled rotating assignment to the vessel, such training shall be given not later than two weeks after the time of first joining the vessel.

(b) Instructions in the use of the vessel's life-saving appliances and in survival at sea shall be given at the same intervals as the drills. Individual instruction may cover different parts of the vessel's life-saving system, but all the vessel's life-saving equipment and appliances shall be covered within any period of two months. Each member of the crew shall be given instructions which shall include but not necessarily be limited to:

(i) operation and use of the vessel's inflatable liferafts, including precautions concerning nailed shoes and other sharp objects;

(ii) problems of hypothermia, first-aid treatment for hypothermia and other appropriate first-aid procedures;

---

43 See the *Guidelines on training crews for the purpose of launching lifeboats and rescue boats from ships making headway through the water*, adopted by the Organization by resolution A.624(15).

(iii) special instructions necessary for use of the vessel's life-saving appliances in severe weather and severe sea conditions.

(c) Onboard training in the use of davit-launched liferafts shall take place at intervals of not more than four months on every vessel fitted with such appliances. Whenever practicable, this shall include the inflation and lowering of a liferaft. This liferaft may be a special liferaft intended for training purposes only, which is not part of the vessel's life-saving equipment; such a special liferaft shall be conspicuously marked.

(3) Records

The date when musters are held, details of abandon ship drills and fire drills, drills of other life-saving appliances and onboard training shall be recorded in such log-book as may be prescribed by the Administration. If a full muster, drill or training session is not held at the appointed time, an entry shall be made in the log-book stating the circumstances and the extent of the muster, drill or training session held.

(4) Training manual

(a) A training manual shall be provided in each crew mess room and recreation room or in each crew cabin. The training manual, which may comprise several volumes, shall contain instructions and information, in easily understood terms illustrated wherever possible, on the life-saving appliances provided in the vessel and on the best methods of survival. Any part of such information may be provided in the form of audio-visual aids in lieu of the manual. The following shall be explained in detail:

(i) donning of lifejackets and immersion suits, as appropriate;

(ii) muster at the assigned stations;

(iii) boarding, launching and clearing the survival craft and rescue boats;

(iv) method of launching from within the survival craft;

(v) release from launching appliances;

(vi) methods and use of devices for protection in launching areas, where appropriate;

(vii) illumination in launching areas;

(viii) use of all survival equipment;

(ix) use of all detection equipment;

(x) with the assistance of illustrations, the use of radio life-saving appliances;

(xi) use of drogues;

(xii) use of engine and accessories;

(xiii) recovery of survival craft and rescue boats, including stowage and securing;

(xiv) hazards of exposure and the need for warm clothing;

(xv) best use of the survival craft facilities in order to survive;[44]

(xvi) methods of retrieval, including the use of helicopter rescue gear (slings, baskets, stretchers), breeches-buoy and shore life-saving apparatus and vessel's line-throwing apparatus;

(xvii) all other functions contained in the muster list and emergency instructions;

(xviii) instructions for emergency repair of the life-saving appliances.

(b) On vessels of less than 45 m in length, the Administration may permit relaxation of the requirements of subparagraph (a). However, appropriate safety information shall be carried on board.

Regulation 4
Training in emergency procedures

The Administration shall take such measures as it may deem necessary to ensure that crews are adequately trained in their duties in the event of emergencies. Such training shall include, as appropriate:

(a) types of emergencies which may occur, such as collisions, fire and foundering;

(b) types of life-saving appliances normally carried on vessels;

(c) need to adhere to the principles of survival;

(d) value of training and drills;

(e) need to be ready for any emergency and to be constantly aware of:

(i) the information in the muster list, in particular:

- each crew member's specific duties in any emergency;
- each crew member's own survival station; and
- the signals calling the crew to their survival craft or fire stations;

(ii) location of each crew member's own lifejacket and spare lifejackets;

(iii) location of fire alarm controls;

(iv) means of escape;

---

44 See the *Instructions for action in survival craft*, adopted by the Organization by resolution A.657(16).

(v) consequences of panic;

(f) actions to be taken in respect to lifting persons from vessels and survival craft by helicopter;

(g) actions to be taken when called to survival craft stations, including:

(i) putting on suitable clothing;

(ii) donning of lifejacket; and

(iii) collecting additional protection such as blankets, time permitting;

(h) actions to be taken when required to abandon ship, such as:

(i) how to board survival craft from vessel and water; and

(ii) how to jump into the sea from a height and reduce the risk of injury when entering the water;

(i) actions to be taken when in the water, such as:

(i) how to survive in circumstances of:

- fire or oil on the water;
- cold conditions; and
- shark-infested waters;

(ii) how to right a capsized survival craft;

(j) actions to be taken when aboard a survival craft, such as:

(i) getting the survival craft quickly clear of the vessel;

(ii) protection against cold or extreme heat;

(iii) using a drogue or sea-anchor;

(iv) keeping a look-out;

(v) recovering and caring for survivors;

(vi) facilitating detection by others;

(vii) checking equipment available for use in the survival craft and using it correctly; and

(viii) remaining, so far as possible, in the vicinity;

(k) main dangers to survivors and the general principles of survival, including:

(i) precautions to be taken in cold climates;

(ii) precautions to be taken in tropical climates;

(iii) exposure to sun, wind, rain and sea;

(iv) importance of wearing suitable clothing;

(v) protective measures in survival craft;

(vi) effects of immersion in the water, and of hypothermia;

(vii) importance of preserving body fluids;

(viii) protection against seasickness;

(ix) proper use of fresh water and food;

(x) effects of drinking seawater;

(xi) means available for facilitating detection by others; and

(xii) importance of maintaining morale;

(l) actions to be taken in respect to fire fighting:

(i) the use of fire hoses with different nozzles;

(ii) the use of fire extinguishers;

(iii) knowledge of the location of fire doors; and

(iv) the use of breathing apparatus.

CHAPTER IX
RADIOCOMMUNICATIONS

PART A
APPLICATION AND DEFINITIONS

Regulation 1
Application

(1) Unless expressly provided otherwise, this chapter shall apply to new and existing vessels of 45 m in length and over. However, for existing vessels, the Administration may defer the implementation of the requirements until 1 February 1999, or the date of entry into force of the Protocol, whichever occurs later.

(2) No provision in this chapter shall prevent the use by any vessel, survival craft or person in distress of any means at their disposal to attract attention, make known their position and obtain help. Notwithstanding the provisions of paragraph (1), the Administration may permit the existing radiocommunication system to continue to be used on board existing fishing vessels, providing the Administration is satisfied that it is equivalent to the requirements of this chapter.

Regulation 2
Terms and definitions

(1) For the purpose of this chapter, the following terms shall have the meanings defined below:

(a) *Bridge-to-bridge communications* means safety communications between vessels from the position from which the vessels are normally navigated.

(b) *Continuous watch* means that the radio watch concerned shall not be interrupted other than for brief intervals when the vessel's receiving capability is impaired or blocked by its own communications or when the facilities are under periodical maintenance or checks.

(c) *Digital selective calling (DSC)* means a technique using digital codes which enables a radio station to establish contact with, and transfer information to, another station or group of stations, and complying with the relevant recommendations of the International Radio Consultative Committee (CCIR).

(d) *Direct-printing telegraphy* means automated telegraphy techniques which comply with the relevant recommendations of the CCIR.

(e) *General radiocommunications* means operational and public correspondence traffic, other than distress, urgency and safety messages, conducted by radio.

(f) *Inmarsat* means the Organization established by the Convention on the International Maritime Satellite Organization adopted on 3 September 1976.

(g) *International NAVTEX service* means the co-ordinated broadcast and automatic reception on 518 kHz of maritime safety information by means of narrow-band direct-printing telegraphy using the English language.[45]

(h) *Locating* means the finding of ships, vessels, aircraft, units or persons in distress.

(i) *Maritime safety information* means navigational and meteorological warnings, meteorological forecasts and other urgent safety-related messages broadcast to vessels.

(j) *Polar orbiting satellite service* means a service which is based on polar orbiting satellites which receive and relay distress alerts from satellite emergency position-indicating radio beacons (satellite EPIRBs) and which provides their position.

(k) *Radio Regulations* means the Radio Regulations annexed to, or regarded as being annexed to, the most recent International Telecommunication Convention which is in force at any time.

(l) *Sea area A1* means an area within the radiotelephone coverage of at least one VHF coast station in which continuous DSC alerting is available, as may be defined by a Party.[46]

---

45 See the NAVTEX Manual, approved by the Organization (publication IMO-951E).

(m) *Sea area A2* means an area, excluding sea area A1, within the radiotelephone coverage of at least one MF coast station in which continuous DSC alerting is available, as may be defined by a Party.[46]

(n) *Sea area A3* means an area, excluding sea areas A1 and A2, within the coverage of an Inmarsat geostationary satellite in which continuous alerting is available.

(o) *Sea area A4* means an area outside sea areas A1, A2 and A3.

(2) All other terms and abbreviations which are used in this chapter and which are defined in the Radio Regulations shall have the meanings as defined in those Regulations.

Regulation 3
Exemptions

(1) The Parties to the Protocol consider it highly desirable not to deviate from the requirements of this chapter; nevertheless, the Administration may grant partial or conditional exemptions to individual vessels from the requirements of regulations 6 to 10 and 14(7), provided:

(a) such vessels comply with the functional requirements of regulation 4; and

(b) the Administration has taken into account the effect such exemptions may have upon the general efficiency of the service for the safety of all ships and vessels.

(2) An exemption may be granted under paragraph (1) only:

(a) if the conditions affecting safety are such as to render the full application of regulations 6 to 10 and 14(7) unreasonable or unnecessary; or

(b) in exceptional circumstances, for a single voyage outside the sea area or sea areas for which the vessel is equipped; or

(c) when the vessel will be taken permanently out of service within two years of the date of entry into force of the Protocol, or 1 February 1999, whichever occurs later,

for the application of a requirement of this chapter.

(3) Each Administration shall submit to the Organization, as soon as possible after the first of January in each year, a report showing all exemptions granted under paragraphs (1) and (2) during the previous calendar year and giving the reasons for granting such exemptions.

---

46 See the *Provision of radio services for the Global Maritime Distress and Safety System (GMDSS)*, adopted by the Organization by resolution A.801(19), as amended by resolution MSC.199(80).

Regulation 4
Functional requirements

Every vessel, while at sea, shall be capable:

(a) except as provided in regulations 7(1)(a) and 9(1)(d)(iii), of transmitting ship-to-shore distress alerts by at least two separate and independent means, each using a different radiocommunication service;

(b) of receiving shore-to-ship distress alerts;

(c) of transmitting and receiving ship-to-ship distress alerts;

(d) of transmitting and receiving search and rescue co-ordinating communications;

(e) of transmitting and receiving on-scene communications;

(f) of transmitting and, as required by regulation X/3(6), receiving signals for locating;[47]

(g) of transmitting and receiving[48] maritime safety information;

(h) of transmitting and receiving general radiocommunications to and from shore-based radio systems or networks subject to regulation 14(8); and

(i) of transmitting and receiving bridge-to-bridge communications.

PART B
SHIP REQUIREMENTS

Regulation 5
Radio installations

(1) Every vessel shall be provided with radio installations capable of complying with the functional requirements prescribed by regulation 4 throughout its intended voyage and, unless exempted under regulation 3, complying with the requirements of regulation 6 and, as appropriate for the sea area or areas through which it will pass during its intended voyage, the requirements of either regulation 7, 8, 9 or 10.

(2) Every radio installation shall:

(a) be so located that no harmful interference of mechanical, electrical or other origin affects its proper use, and so as to ensure electromagnetic compatibility and avoidance of harmful interaction with other equipment and systems;

(b) be so located as to ensure the greatest possible degree of safety and operational availability;

---

47 See *Carriage of radar operating in the frequency band 9,300–9,500 MHz*, adopted by the Organization by resolution A.614(15).

48 It should be noted that vessels may have a need for reception of certain maritime safety information while in port.

(c) be protected against harmful effects of water, extremes of temperature and other adverse environmental conditions;

(d) be provided with reliable, permanently arranged electrical lighting, independent of the main and emergency sources of electrical power, for the adequate illumination of the radio controls for operating the radio installation; and

(e) be clearly marked with the call sign, the ship station identity and other codes as applicable for the use of the radio installation.

(3) Control of the VHF radiotelephone channels, required for navigational safety, shall be immediately available on the navigation bridge convenient to the conning position and, where necessary, facilities should be available to permit radiocommunications from the wings of the navigation bridge. Portable VHF equipment may be used to meet the latter provision.

Regulation 6
Radio equipment: General

(1) Except as provided in regulation 9(4), every vessel shall be provided with:

(a) a VHF radio installation capable of transmitting and receiving:

(i) DSC on the frequency 156.525 MHz (channel 70). It shall be possible to initiate the transmission of distress alerts on channel 70 from the position from which the vessel is normally navigated; and

(ii) radiotelephony on the frequencies 156.300 MHz (channel 6), 156.650 MHz (channel 13) and 156.800 MHz (channel 16);

(b) a radio installation capable of maintaining a continuous DSC watch on VHF channel 70 which may be separate from, or combined with, that required by subparagraph (a)(i);

(c) a radar transponder capable of operating in the 9 GHz band, which:

(i) shall be so stowed that it can be easily utilized; and

(ii) may be one of those required by regulation VII/14 for a survival craft;

(d) a receiver capable of receiving international NAVTEX service broadcasts if the vessel is engaged on voyages in any area in which an international NAVTEX service is provided;

(e) a radio facility for reception of maritime safety information by the Inmarsat enhanced group calling system, if the vessel is engaged on voyages in any area of Inmarsat coverage but in which an international NAVTEX service is not provided. However, vessels engaged exclusively on voyages in areas where an HF direct-printing telegraphy maritime safety information service

is provided and fitted with equipment capable of receiving such service, may be exempted from this requirement;[49]

(f) subject to the provisions of regulation 7(3), a satellite EPIRB[50] which shall be:

(i) capable of transmitting a distress alert either through the polar orbiting satellite service operating in the 406 MHz band or, if the vessel is engaged only on voyages within Inmarsat coverage, through the Inmarsat geostationary satellite service operating in the 1.6 GHz band;[51]

(ii) installed in an easily accessible position;

(iii) ready to be manually released and capable of being carried by one person into a survival craft;

(iv) capable of floating free, if the vessel sinks, and of being automatically activated, when afloat; and

(v) capable of being activated manually.

(2) Until 1 February 1999 or until such other date as may be determined by the Maritime Safety Committee of the Organization, every vessel shall, in addition, be fitted with a radio receiver capable of maintaining a radiotelephone distress frequency watch on 2,182 kHz.

(3) Until 1 February 1999 if the Protocol enters into force earlier than that date, every vessel shall, unless the vessel is engaged on voyages in sea area A1 only, be fitted with a device for generating the radiotelephone alarm signal on the frequency 2,182 kHz.

(4) The Administration may exempt vessels constructed on or after 1 February 1997 from the requirements prescribed by paragraphs (2) and (3).

Regulation 7
Radio equipment: Sea area A1

(1) In addition to meeting the requirements of regulation 6, every vessel engaged on voyages exclusively in sea area A1 shall be provided with a radio installation capable of initiating the transmission of ship-to-shore distress alerts from the position from which the vessel is normally navigated, operating either:

(a) on VHF using DSC. This requirement may be fulfilled by the EPIRB prescribed by paragraph (3), either by installing the EPIRB close to, or by remote activation from, the position from which the vessel is normally navigated; or

---

49 See *Promulgation of maritime safety information*, adopted by the Organization by resolution A.705(17), as amended by MSC.1/Circ.1287; the *Carriage of INMARSAT enhanced group call safety NET receivers under the GMDSS* (resolution A.701(17)) and the *Guidelines for maintenance of satellite EPIRB* (MSC.1/Circ.1039).

50 See *Search and rescue homing capability*, adopted by the Organization by resolution A.616(15).

51 Subject to the availability of appropriate receiving and processing ground facilities for each ocean region covered by Inmarsat satellites.

(b) through the polar orbiting satellite service on 406 MHz. This requirement may be fulfilled by the satellite EPIRB, required by regulation 6(1)(f), either by installing the satellite EPIRB close to, or by remote activation from, the position from which the vessel is normally navigated; or

(c) if the vessel is engaged on voyages within coverage of MF coast stations equipped with DSC, on MF using DSC; or

(d) on HF using DSC; or

(e) through the Inmarsat geostationary satellite service. This requirement may be fulfilled by:

(i) an Inmarsat ship earth station;[52] or

(ii) the satellite EPIRB, required by regulation 6(1)(f), either by installing the satellite EPIRB close to, or by remote activation from, the position from which the vessel is normally navigated.

(2) The VHF radio installation, required by regulation 6(1)(a), shall also be capable of transmitting and receiving general radiocommunications using radiotelephony.

(3) Vessels engaged on voyages exclusively in sea area A1 may carry, in lieu of the satellite EPIRB required by regulation 6(1)(f), an EPIRB which shall be:

(a) capable of transmitting a distress alert using DSC on VHF channel 70 and providing for locating by means of a radar transponder operating in the 9 GHz band;

(b) installed in an easily accessible position;

(c) ready to be manually released and capable of being carried by one person into a survival craft;

(d) capable of floating free, if the vessel sinks, and being automatically activated, when afloat; and

(e) capable of being activated manually.

Regulation 8
Radio equipment: Sea areas A1 and A2

(1) In addition to meeting the requirements of regulation 6, every vessel engaged on voyages beyond sea area A1, but remaining within sea area A2, shall be provided with:

(a) an MF radio installation capable of transmitting and receiving, for distress and safety purposes, on the frequencies:

(i) 2,187.5 kHz using DSC; and

(ii) 2,182 kHz using radiotelephony;

---

52 This requirement can be met by Inmarsat ship earth stations capable of two-way communications, such as Fleet-77 (resolutions A.808(19) and MSC.130(75)) or Inmarsat-C (resolution A.807(19), as amended) ship earth stations. Unless otherwise specified, this footnote applies to all requirements for an Inmarsat ship earth station prescribed by this chapter.

(b) a radio installation capable of maintaining a continuous DSC watch on the frequency 2,187.5 kHz which may be separate from, or combined with, that required by subparagraph (a)(i); and

(c) means of initiating the transmission of ship-to-shore distress alerts by a radio service other than MF operating either:

(i) through the polar orbiting satellite service on 406 MHz. This requirement may be fulfilled by the satellite EPIRB, required by regulation 6(1)(f), either by installing the satellite EPIRB close to, or by remote activation from, the position from which the vessel is normally navigated; or

(ii) on HF using DSC; or

(iii) through the Inmarsat geostationary satellite service. This requirement may be fulfilled by an Inmarsat ship earth station, or by the satellite EPIRB, required by regulation 6 (1)(f), either by installing the satellite EPIRB close to, or by remote activation from, the position from which the vessel is normally navigated.

(2) It shall be possible to initiate transmission of distress alerts by the radio installations specified in paragraphs (1)(a) and (1)(c) from the position from which the vessel is normally navigated.

(3) The vessel shall, in addition, be capable of transmitting and receiving general radiocommunications using radiotelephony or direct-printing telegraphy by either:

(a) a radio installation operating on working frequencies in the bands between 1,605 and 4,000 kHz or between 4,000 and 27,500 kHz. This requirement may be fulfilled by the addition of this capability in the equipment required by paragraph (1)(a); or

(b) an Inmarsat ship earth station.

(4) The Administration may exempt vessels constructed before 1 February 1997, which are engaged exclusively on voyages within sea area A2, from the requirements of regulations 6(1)(a)(i) and 6(1)(b), provided such vessels maintain, when practicable, a continuous listening watch on VHF channel 16. This watch shall be kept at the position from which the vessel is normally navigated.

Regulation 9
Radio equipment: Sea areas A1, A2 and A3

(1) In addition to meeting the requirements of regulation 6, every vessel engaged on voyages beyond sea areas A1 and A2, but remaining within sea area A3, shall, if it does not comply with the requirements of paragraph (2), be provided with:

(a) an Inmarsat ship earth station capable of:

(i) transmitting and receiving distress and safety communications using direct-printing telegraphy;

(ii) initiating and receiving distress priority calls;

(iii) maintaining watch for shore-to-ship distress alerts, including those directed to specifically defined geographical areas;

(iv) transmitting and receiving general radiocommunications, using either radiotelephony or direct-printing telegraphy; and

(b) an MF radio installation capable of transmitting and receiving, for distress and safety purposes, on the frequencies:

(i) 2,187.5 kHz using DSC; and

(ii) 2,182 kHz using radiotelephony; and

(c) a radio installation capable of maintaining a continuous DSC watch on the frequency 2,187.5 kHz which may be separate from, or combined with, that required by subparagraph (b)(i); and

(d) means of initiating the transmission of ship-to-shore distress alerts by a radio service operating either:

(i) through the polar orbiting satellite service on 406 MHz. This requirement may be fulfilled by the satellite EPIRB, required by regulation 6(1)(f), either by installing the satellite EPIRB close to, or by remote activation from, the position from which the vessel is normally navigated; or

(ii) on HF using DSC; or

(iii) through the Inmarsat geostationary satellite service, by an additional ship earth station or by the satellite EPIRB required by regulation 6(1)(f), either by installing the satellite EPIRB close to, or by remote activation from, the position from which the vessel is normally navigated.

(2) In addition to meeting the requirements of regulation 6, every vessel engaged on voyages beyond sea areas A1 and A2, but remaining within sea area A3, shall, if it does not comply with the requirements of paragraph (1), be provided with:

(a) an MF/HF radio installation capable of transmitting and receiving, for distress and safety purposes, on all distress and safety frequencies in the bands between 1,605 and 4,000 kHz and between 4,000 and 27,500 kHz:

(i) using DSC;

(ii) using radiotelephony; and

(iii) using direct-printing telegraphy; and

(b) equipment capable of maintaining DSC watch on 2,187.5 kHz, 8,414.5 kHz and on at least one of the distress and safety DSC frequencies 4,207.5 kHz, 6,312 kHz, 12,577 kHz or 16,804.5 kHz; at any time, it shall be possible to select any of these DSC distress and safety frequencies. This equipment may be separate from, or combined with, the equipment required by subparagraph (a); and

(c) means of initiating the transmission of ship-to-shore distress alerts by a radiocommunication service other than HF operating either:

(i) through the polar orbiting satellite service on 406 MHz. This requirement may be fulfilled by the satellite EPIRB, required by regulation 6(1)(f), either by installing the satellite EPIRB close to, or by remote activation from, the position from which the vessel is normally navigated; or

(ii) through the Inmarsat geostationary satellite service. This requirement may be fulfilled by an Inmarsat ship earth station or the satellite EPIRB, required by regulation 6(1)(f), either by installing the satellite EPIRB close to, or by remote activation from, the position from which the vessel is normally navigated; and

(d) in addition, vessels shall be capable of transmitting and receiving general radiocommunications using radiotelephony or direct-printing telegraphy by an MF/HF radio installation operating on working frequencies in the bands between 1,605 and 4,000 kHz and between 4,000 and 27,500 kHz. This requirement may be fulfilled by the addition of this capability in the equipment required by subparagraph (a).

(3) It shall be possible to initiate transmission of distress alerts by the radio installations specified in paragraphs (1)(a), (1)(b), (1)(d), (2)(a) and (2)(c) from the position from which the vessel is normally navigated.

(4) The Administration may exempt vessels constructed before 1 February 1997 and engaged exclusively on voyages within sea areas A2 and A3 from the requirements of regulations 6(1)(a)(i) and 6(1)(b), provided such vessels maintain, when practicable, a continuous listening watch on VHF channel 16. This watch shall be kept at the position from which the vessel is normally navigated.

Regulation 10
Radio equipment: Sea areas A1, A2, A3 and A4

(1) In addition to meeting the requirements of regulation 6, vessels engaged on voyages in all sea areas shall be provided with the radio installations and equipment required by regulation 9(2), except that the equipment required by regulation 9(2)(c)(ii), shall not be accepted as an alternative to that required by regulation 9(2)(c)(i) which shall always be provided. In addition, vessels engaged on voyages in all sea areas shall comply with the requirements of regulation 9(3).

(2) The Administration may exempt vessels constructed before 1 February 1997 and engaged exclusively on voyages within sea areas A2, A3 and A4 from the requirements of regulations 6(1)(a)(i) and 6(1)(b), provided such vessels maintain, when practicable, a continuous listening watch on VHF channel 16. This watch shall be kept at the position from which the vessel is normally navigated.

Regulation 11
Watches

(1) Every vessel, while at sea, shall maintain a continuous watch:

(a) on VHF DSC channel 70, if the vessel, in accordance with the requirements of regulation 6(1)(b), is fitted with a VHF radio installation;

(b) on the distress and safety DSC frequency 2,187.5 kHz, if the vessel, in accordance with the requirements of regulation 8(1)(b) or 9(1)(c), is fitted with an MF radio installation;

(c) on the distress and safety DSC frequencies 2,187.5 kHz and 8,414.5 kHz and also on at least one of the distress and safety DSC frequencies 4,207.5 kHz, 6,312 kHz, 12,577 kHz or 16,804.5 kHz, appropriate to the time of day and the geographical position of the vessel, if the vessel, in accordance with the requirements of regulation 9(2)(b) or 10(1), is fitted with an MF/HF radio installation. This watch may be kept by means of a scanning receiver;

(d) for satellite shore-to-ship distress alerts, if the vessel, in accordance with the requirements of regulation 9(1)(a), is fitted with an Inmarsat ship earth station.

(2) Every vessel, while at sea, shall maintain a radio watch for broadcasts of maritime safety information on the appropriate frequency or frequencies on which such information is broadcast for the area in which the vessel is navigating.

(3) Until 1 February 1999 or until such other date as may be determined by the Maritime Safety Committee of the Organization, every vessel, while at sea, shall maintain, when practicable, a continuous listening watch on VHF channel 16. This watch shall be kept at the position from which the vessel is normally navigated.

(4) Until 1 February 1999 or until such other date as may be determined by the Maritime Safety Committee of the Organization, every vessel, while at sea, shall maintain, when practicable, a continuous watch on the radiotelephone distress frequency 2,182 kHz. This watch shall be kept at the position from which the vessel is normally navigated.[53]

Regulation 12
Sources of energy

(1) There shall be available at all times, while the vessel is at sea, a supply of electrical energy sufficient to operate the radio installations and to charge any batteries used as part of a reserve source or sources of energy for the radio installations.

(2) A reserve source or sources of energy shall be provided on every vessel, to supply radio installations, for the purpose of conducting distress and safety radiocommunications, in the event of failure of the vessel's main and emergency sources of electrical power. The reserve source or sources of energy shall be capable of simultaneously operating the VHF radio installation required by regulation 6(1)(a) and, as appropriate for the sea area or sea areas for which the vessel is equipped, either the MF radio installation required by regulation 8(1)(a), the MF/HF radio installation required by regulation 9(2)(a) or 10(1), or the Inmarsat ship earth station required by regulation 9(1)(a) and any of the additional loads mentioned in paragraphs (4), (5) and (8) for a period of at least:

(a) on new vessels:

(i) 3 h, or

---

53 The Maritime Safety Committee decided (resolution MSC.131(75)) that all GMDSS ships, while at sea, shall continue to maintain, when practicable, continuous listening watch on VHF channel 16.

(ii) 1 h, if the emergency source of electrical power complies fully with all relevant requirements of regulation IV/17 including the requirements to supply the radio installations and is capable of serving for a period of at least 6 h;

(b) on existing vessels:

(i) 6 h, if the emergency source of electrical power is not provided or does not comply fully with all relevant requirements of regulation IV/17, including the requirements to supply the radio installations;[54] or

(ii) 3 h, if the emergency source of electrical power complies fully with all relevant requirements of regulation IV/17, including the requirements to supply the radio installations; or

(iii) 1 h, if the emergency source of electrical power complies fully with all relevant requirements of regulation IV/17, including the requirements to supply the radio installations and is capable of serving for a period of at least 6 h.

The reserve source or sources of energy need not supply independent HF and MF radio installations at the same time.

(3) The reserve source or sources of energy shall be independent of the propelling power of the vessel and the vessel's electrical system.

(4) Where, in addition to the VHF radio installation, two or more of the other radio installations, referred to in paragraph (2), can be connected to the reserve source or sources of energy, they shall be capable of simultaneously supplying, for the period specified, as appropriate, in paragraph (2)(a) or (2)(b), the VHF radio installation and:

(a) all other radio installations which can be connected to the reserve source or sources of energy at the same time; or

(b) whichever of the other radio installations will consume the most power, if only one of the other radio installations can be connected to the reserve source or sources of energy at the same time as the VHF radio installation.

(5) The reserve source or sources of energy may be used to supply the electrical lighting required by regulation 5(2)(d).

(6) Where a reserve source of energy consists of a rechargeable accumulator battery or batteries:

(a) a means of automatically charging such batteries shall be provided which shall be capable of recharging them to minimum capacity requirements within 10 h; and

---

54 For guidance, the following formula is recommended for determining the electrical load to be supplied by the reserve source of energy for each radio installation required for distress conditions: 1/2 of the current consumption necessary for transmission + the current consumption necessary for reception + current consumption of any additional loads.

(b) the capacity of the battery or batteries shall be checked, using an appropriate method,[55] at intervals not exceeding 12 months, when the vessel is not at sea.

(7) The siting and installation of accumulator batteries which provide a reserve source of energy shall be such as to ensure:

(a) the highest degree of service;

(b) a reasonable lifetime;

(c) reasonable safety;

(d) that battery temperatures remain within the manufacturer's specifications whether under charge or idle; and

(e) that, when fully charged, the batteries will provide at least the minimum required hours of operation under all weather conditions.

(8) If an uninterrupted input of information from the vessel's navigational or other equipment to a radio installation required by this chapter is needed to ensure its proper performance, means shall be provided to ensure the continuous supply of such information in the event of failure of the vessel's main or emergency source of electrical power.

Regulation 13
Performance standards

(1) All equipment to which this chapter applies shall be of a type approved by the Administration. Subject to paragraph (2), such equipment shall conform to appropriate performance standards not inferior to those adopted by the Organization.[56]

---

55 One method of checking the capacity of an accumulator battery is to fully discharge and recharge the battery, using normal operating current and period (e.g. 10 h). Assessment of the charge condition can be made at any time, but it should be done without significant discharge of the battery when the ship is at sea.

56 See the following resolutions adopted by the Assembly and the Maritime Safety Committee of the Organization:

.1 Resolution A.525(13): *Performance standards for narrow-band direct-printing telegraph equipment for the reception of navigational and meteorological warnings and urgent information to ships*, as amended by resolution MSC.148(77).

.2 Resolution A.694(17): *General requirements for shipborne radio equipment forming part of the Global Maritime Distress and Safety System (GMDSS) and for electronic navigational aids.*

.3 Resolution A.808(19): *Performance standards for ship earth stations capable of two-way communications*, as amended by resolution MSC.148(77); resolution A.570(14): *Type approval of ship earth stations*; and resolution MSC.130(75): *Performance standards for Inmarsat ship earth stations capable of two-way communications.*

.4 Resolution A.803(19): *Performance standards for shipborne VHF radio installations capable of voice communication and digital selective calling*, as amended; and resolution MSC.68(68), annex 1 (valid for equipment installed on or after 1 January 2000).

.5 Resolution A.804(19): *Performance standards for shipborne MF radio installations capable of voice communication and digital selective calling*, as amended; and resolution MSC.68(68), annex 2 (valid for equipment installed on or after 1 January 2000).

.6 Resolution A.806(19): *Performance standards for shipborne MF/HF radio installations capable of voice communication, narrow-band direct-printing and digital selective calling*, as amended; and resolution MSC.68(68), annex 3 (valid for equipment installed on or after 1 January 2000).

.7 Resolution A.810(19): *Performance standards for float-free satellite emergency position-indicating radio beacons (EPIRBS) operating on 406 MHz*; and resolution MSC.120(74): *Adoption of amendments to performance standards for float-free satellite emergency position-indicating radio beacons (EPIRBs) operating on 406 MHz* (resolution A.810(19)) (see also resolution A.696(17): *Type approval of satellite emergency position-indicating radio beacons (EPIRBs) operating in the COSPAS–SARSAT system*).

(2) Equipment installed prior to the dates of application prescribed by regulation 1 may be exempted from full compliance with the appropriate performance standards at the discretion of the Administration, provided that the equipment is compatible with equipment complying with the performance standards, having due regard to the criteria which the Organization may adopt in connection with such standards.

Regulation 14
Maintenance requirements

(1) Equipment shall be so designed that the main units can be replaced readily, without elaborate recalibration or readjustment.

(2) Where applicable, equipment shall be so constructed and installed that it is readily accessible for inspection and on-board maintenance purposes.

(3) Adequate information shall be provided to enable the equipment to be properly operated and maintained taking into account the recommendations of the Organization.[57]

(4) Adequate tools and spares shall be provided to enable the equipment to be maintained.

(5) The Administration shall ensure that radio equipment required by this chapter is maintained to provide the availability of the functional requirements specified in regulation 4 and to meet the recommended performance standards of such equipment.

(6) On vessels engaged on voyages in sea areas A1 and A2, the availability shall be ensured by using such methods as duplication of equipment, shore-based maintenance or at-sea electronic maintenance capability, or a combination of these, as may be approved by the Administration.

(7) On vessels engaged on voyages in sea areas A3 and A4, the availability shall be ensured by using a combination of at least two methods such as duplication of equipment, shore-based maintenance or at-sea electronic maintenance capability, as may be approved

---

.8 Resolution A.802(19): *Performance standards for survival craft radar transponders for use in search and rescue operations*, as amended by resolution MSC.297(83).
.9 Resolution A.805(19): *Performance standards for float-free VHF emergency position-indicating radio beacons.*
.10 Resolution A.807(19): *Performance standards for Inmarsat standard-C ship earth stations capable of transmitting and receiving direct-printing communications*, as amended; resolution MSC.68(68), annex 3 (valid for equipment installed on or after 1 January 2000); and resolution A.570(14): *Type approval of ship earth stations.*
.11 Resolution MSC.306(87): *Performance standards for enhanced group call equipment.*
.12 Resolution A.662(16): *Performance standards for float-free release and activation arrangements for emergency radio equipment.*
.13 Resolution A.669(17): *System performance standard for the promulgation and co-ordinating of maritime safety information using high-frequency narrow-band direct printing.*
.14 Resolution MSC.148(77): *Adoption of the revised performance standards for narrow-band direct-printing telegraph equipment for the reception of navigational and meteorological warnings and urgent information to ships (NAVTEX).*
.15 Resolution A.811(19): *Performance standards for a shipborne integrated radiocommunication system (IRCS) when used in the GMDSS.*
.16 Resolution MSC.80(70), annex 1: *Performance standards for on-scene (aeronautical) two-way portable VHF radiotelephone apparatus.*

57 See the *Recommendation on general requirements for shipborne radio equipment forming part of the Global Maritime Distress and Safety System (GMDSS) and for electronic navigational aids*, adopted by the Organization by resolution A.694(17); resolution A.813(19): *General requirements for electromagnetic compatibility (EMC) for all electrical and electronic ship's equipment*; and MSC/Circ.862: *Clarification of certain requirements in IMO performance standards for GMDSS equipment.*

by the Administration, taking into account the recommendations of the Organization.[58] However, the Administration may exempt a vessel from the requirement of using two methods and allow the use of one method, taking account of the type of vessel and its mode of operation.

(8) While all reasonable steps shall be taken to maintain the equipment in efficient working order to ensure compliance with all the functional requirements specified in regulation 4, malfunction of the equipment for providing the general radiocommunications required by regulation 4(h) shall not be considered as making a vessel unseaworthy or as a reason for delaying the vessel in ports where repair facilities are not readily available, provided the vessel is capable of performing all distress and safety functions.

Regulation 15
Radio personnel

Every vessel shall carry personnel qualified for distress and safety radiocommunication purposes to the satisfaction of the Administration.[59] The personnel shall be holders of certificates specified in the Radio Regulations, as appropriate, any one of whom shall be designated to have primary responsibility for radiocommunications during distress incidents.

Regulation 16
Radio records

A record shall be kept, to the satisfaction of the Administration and as required by the Radio Regulations, of all incidents connected with the radiocommunication service which appear to be of importance to safety of life at sea.

CHAPTER X
SHIPBORNE NAVIGATIONAL EQUIPMENT AND ARRANGEMENTS

Regulation 1
Application

Unless expressly provided otherwise, this chapter shall apply to new and existing vessels.

Regulation 2
Exemptions

The Administration may exempt any vessel from any of the requirements of this chapter where it considers that the nature of the voyage or the vessel's proximity to land does not warrant such requirements.

---

58 See the *Radio maintenance guidelines for the Global Maritime Distress and Safety System (GMDSS) related to sea areas A3 and A4*, adopted by the Organization by resolution A.702(17).

59 See the 1995 STCW Code, chapter IV, section B-IV/2.

Regulation 3
Shipborne navigational equipment[60]

(1) (a) Vessels of 24 m in length and over shall be fitted with:

(i) a standard magnetic compass, except as provided in subparagraph (d);

(ii) a steering magnetic compass, unless heading information provided by the standard compass required under (i) is made available and is clearly readable by the helmsman at the main steering position;

(iii) adequate means of communication between the standard compass position and the normal navigation control position to the satisfaction of the Administration; and

(iv) means for taking bearings as nearly as practicable over an arc of the horizon of 360°.

(b) Each magnetic compass referred to in subparagraph (a) shall be properly adjusted and its table or curve of residual deviations shall be available at all times.

(c) A spare magnetic compass, interchangeable with the standard compass, shall be carried, unless the steering compass mentioned in subparagraph (a)(ii) or a gyro-compass is fitted.

(d) The Administration, if it considers it unreasonable or unnecessary to require a standard magnetic compass, may exempt individual vessels or classes of vessels from these requirements if the nature of the voyage, the vessel's proximity to land or the type of vessel does not warrant a standard compass, provided that a suitable steering compass is in all cases carried.

(2) Vessels of less than 24 m in length shall, as far as the Administration considers it reasonable and practicable, be fitted with a steering compass and have means for taking bearings.

(3) Vessels of 45 m in length and over constructed on or after 1 September 1984 shall be fitted with a gyro-compass complying with the following requirements:

(a) the master gyro-compass or a gyro-repeater shall be clearly readable by the helmsman at the main steering position;

(b) on vessels of 75 m in length and over a gyro-repeater or gyro-repeaters shall be provided and shall be suitably placed for taking bearings as nearly as practicable over an arc of the horizon of 360°.

(4) Vessels of 75 m in length and over constructed before 1 September 1984 shall be fitted with a gyro-compass complying with the requirements of paragraph (3).

---

60 See the *Recommendation on the carriage of electronic position-fixing equipment*, adopted by the Organization by resolution A.156(ES.IV) and the *World-wide radionavigation system*, adopted by the Organization by resolution A.1046(27).

(5) Vessels with emergency steering positions shall at least be provided with a telephone or other means of communication for relaying heading information to such positions. In addition, vessels of 45 m in length and over constructed on or after 1 February 1992 shall be provided with arrangements for supplying visual compass readings to the emergency steering position.

(6) Vessels of 45 m in length and over constructed on or after 1 September 1984 and vessels of 75 m in length and over constructed before 1 September 1984 shall be fitted with a radar installation. From 1 February 1995, the radar installation shall be capable of operating in the 9 GHz frequency band. In addition, after 1 February 1995, vessels of 35 m in length and over shall be fitted with a radar installation capable of operating in the 9 GHz frequency band. Vessels of 35 m in length and over but less than 45 m may be exempted from compliance with the requirements of paragraph (16) at the discretion of the Administration, provided that the equipment is fully compatible with the radar transponder for search and rescue.

(7) In vessels of less than 35 m in length where radar is fitted, the installation shall be to the satisfaction of the Administration.

(8) Facilities for plotting radar readings shall be provided on the navigation bridge of vessels required by paragraph (6) to be fitted with a radar installation. In vessels of 75 m in length and over constructed on or after 1 September 1984, the plotting facilities shall be at least as effective as a reflection plotter.

(9) Vessels of 75 m in length and over constructed before 25 May 1980 and vessels of 45 m in length and over constructed on or after 25 May 1990 shall be fitted with an echo-sounding device.

(10) Vessels of less than 45 m in length shall be provided with suitable means to the satisfaction of the Administration for determining the depth of water under the vessel.

(11) Vessels of 45 m in length and over constructed on or after 1 September 1984 shall be fitted with a device to indicate speed and distance.

(12) Vessels of 75 m in length and over constructed before 1 September 1984 and all vessels of 45 m in length and over constructed on or after 1 September 1984 shall be fitted with indicators showing the rudder angle, the rate of revolution of each propeller and, in addition, if fitted with variable pitch propellers or lateral thrust propellers, the pitch and operational mode of such propellers. All these indicators shall be readable from the conning position.

(13) Except as provided in regulation I/6, while all reasonable steps shall be taken to maintain the apparatus referred to in paragraphs (1) to (12) in efficient working order, malfunctions of the equipment shall not be considered as making a vessel unseaworthy or as a reason for delaying the vessel in ports where repair facilities are not readily available.[61]

(14) Vessels of 75 m in length and over shall be fitted with a radio direction-finding apparatus. The Administration may exempt a vessel from this requirement if it considers it unreasonable or unnecessary for such apparatus to be carried or, if the vessel is provided with other radionavigation equipment suitable for use throughout its intended voyages.

(15) Until 1 February 1999, vessels of 75 m in length and over constructed on or after 25 May 1980 and before 1 February 1995 shall be fitted with radio equipment for homing on the radiotelephone distress frequency.

---

61 See *Recommendation on the use and testing of shipborne navigational equipment*, adopted by the Organization by resolution A.157(ES.IV).

(16) All equipment fitted in compliance with this regulation shall be of a type approved by the Administration. Equipment installed on board vessels on or after 1 September 1984 shall conform to appropriate performance standards not inferior to those adopted by the Organization.[62] Equipment fitted prior to the adoption of related performance standards may be exempted from full compliance with those standards at the discretion of the Administration, having due regard to the recommended criteria which the Organization might adopt in connection with the standards concerned.

---

62 See the following resolutions adopted by the Organization:

.1 Resolution A.694(17): *Recommendation on general requirements for shipborne radio equipment forming part of the GMDSS and for electronic navigational aids.*

.2 Resolution A.424(XI): *Recommendation on performance standards for giro-compasses.*

.3 Resolution MSC.64(67), annex 4: *Recommendation on performance standards for gyro-compasses.*

.4 Resolution MSC.192(79): *Revised Recommendation on performance standards for radar equipment.*

.5 Resolution A.823(19): *Performance standards for automatic radar plotting aids.*

.6 Resolution A.817(19): *Recommendation on performance standards for electronic chart display and information systems (ECDIS)*, as amended by resolution MSC.64(67), annex 5, and resolution MSC.86(70), annex 4, as appropriate.

.7 Resolution A.529(13): *Recommendation on accuracy standards for navigation.*

.8 Resolution A.818(19): *Recommendation on performance standards for shipborne Loran-C and Chayka receivers.*

.9 Resolution A.819(19): *Recommendation on performance standards for shipborne global positioning system receiver equipment.*

.10 Resolution MSC.53(66): *Recommendation on performance standards for shipborne GLONASS receiver equipment*, as amended by resolution MSC.133(73).

.11 Resolution MSC.64(67), annex 2: *Recommendation on performance standards for shipborne DGPS and DGLONASS maritime radio beacon receiver equipment*, as amended by resolution MSC.114(73).

.12 Resolution MSC.74(69), annex 1: *Recommendation on performance standards for combined GPS/GLONASS receiver equipment*, as amended by resolution MSC.115(73).

.13 Resolution MSC.64(67), annex 3: *Recommendation on performance standards for heading control systems.*

.14 Resolution MSC.74(69), annex 2: *Recommendation on performance standards for track control systems.*

.15 Resolution MSC.74(69), annex 3: *Recommendation on performance standards for universal shipborne automatic identification systems (AIS)*; and circular MSC.1/Circ.1252: *Guidelines on annual testing of the automatic system (AIS).*

.16 Resolution A.224(VIII): *Recommendation on performance standards for echo-sounding equipment*, as amended by resolution MSC.74(69), annex 4.

.17 Resolution A.824(19): *Recommendation on performance standards for devices to indicate speed and distance*, as amended by resolution MSC.96(72).

.18 Resolution A.526(13): *Performance standards for rate-of-turn indicators.*

.19 Resolution A.575(14): *Recommendation on uniform of performance standards for navigational equipment.*

.20 Resolution A.343(IX): *Recommendation on methods of measuring noise levels at listening posts.*

.21 Resolution A384(X): *Recommendation on performance standards for radar reflectors*, as amended by resolution MSC.164(78).

.22 Resolution A.382(X): *Recommendation on performance standards for magnetic compasses.*

.23 Resolution MSC.95(72): *Recommendation on performance standards for daylight signalling lamps.*

.24 Resolution MSC.86(70), annex 1: *Recommendation on performance standards for sound reception systems.*

.25 Resolution MSC 86.(70), annex 2: *Recommendation on performance standards for marine transmitting magnetic heading devices (TMHDs).*

.26 Resolution A.861(20): *Recommendation on performance standards for voyage data recorders (VDRs).*

.27 Resolution MSC.116(73): *Recommendations on performance standards for marine transmitting heading devices (THDs).*

Regulation 4
Nautical instruments and publications

Suitable nautical instruments, adequate and up-to-date charts, sailing directions, lists of lights, notices to mariners, tide tables and all other nautical publications necessary for the intended voyage, to the satisfaction of the Administration, shall be carried on board.

Regulation 5
Signalling equipment

(1) A daylight signalling lamp shall be provided, the operation of which is not solely dependent upon the main source of electrical power. The power supply shall in any case include a portable battery.

(2) Vessels of 45 m in length and over shall be provided with a full complement of flags and pennants to enable communications to be sent using the International Code of Signals.

(3) All vessels which, in accordance with the present Protocol, are required to carry radio installations shall carry the International Code of Signals. This publication shall also be carried by any other vessel which, in the opinion of the Administration, has a need to use it.

Regulation 6
Navigation bridge visibility

(1) New vessels of 45 m in length and over shall meet the following requirements:

(a) The view of the sea surface from the conning position shall not be obscured by more than two vessel lengths, or 500 m, whichever is less, forward of the bow to 10° on either side irrespective of the vessel's draught and trim.

(b) No blind sector caused by fishing gear or other obstructions outside of the wheelhouse forward of the beam which obstructs the view of the sea surface as seen from the conning position, shall exceed 10°. The total arc of blind sectors shall not exceed 20°. The clear sectors between blind sectors shall be at least 5°. However, in the view described in subparagraph (a), each individual blind sector shall not exceed 5°.

(c) The height of the lower edge of the navigation bridge front windows above the bridge deck shall be kept as low as possible. In no case shall the lower edge present an obstruction to the forward view as described in this regulation.

(d) The upper edge of the navigating bridge front windows shall allow a forward view of the horizon for a person with a height of eye of 1,800 mm above the bridge deck at the conning position when the vessel is pitching in heavy seas. However, the Administration, being satisfied that a 1,800 mm height of eye is unreasonable and impractical, may reduce the height of eye but not to less than 1,600 mm.

(e) The horizontal field of vision from the conning position shall extend over an arc of not less than 225°, that is from right ahead to not less than 22.5° abaft the beam on either side of the vessel.

(f) From each bridge wing the horizontal field of vision shall extend over an arc of at least 225°, that is from at least 45° on the opposite bow through right ahead and then from right ahead to right astern through 180° on the same side of the vessel.

(g) From the main steering position the horizontal field of vision shall extend over an arc from right ahead to at least 60° on each side of the vessel.

(h) The vessel's side shall be visible from the bridge wing.

(i) Windows shall meet the following requirements:

(i) framing between navigation bridge windows shall be kept to a minimum and not be installed immediately forward of any workstation;

(ii) to help avoid reflections, the bridge front windows shall be inclined from the vertical plane top out, at an angle of not less than 10° and not more than 25°;

(iii) polarized and tinted windows shall not be fitted; and

(iv) a clear view through at least two of the navigation bridge front windows and depending on the bridge configuration, an additional number of clear view windows shall be provided at all times regardless of weather conditions.

(2) Existing vessels shall, where practicable, meet the requirements of paragraphs (1)(a) and (b). However, structural alterations or additional equipment need not be required.

(3) On vessels of unconventional design, which in the opinion of the Administration cannot comply with this regulation, arrangements shall be provided to achieve a level of visibility that is as near as practicable to that prescribed in this regulation.

APPENDIX

CERTIFICATES AND RECORD OF EQUIPMENT

1 Form of Safety Certificate for Fishing Vessels

INTERNATIONAL FISHING VESSEL SAFETY CERTIFICATE

This Certificate shall be supplemented by a
Record of Equipment

(Official seal) (State)

Issued under the provisions of the Cape Town Agreement of 2012 on the Implementation of the Provisions of the Torremolinos Protocol of 1993 relating to the Torremolinos International Convention for the Safety of Fishing Vessels, 1977

under the authority of the Government of

_____
(name of the State)

by

_____
(person or organization authorized)

Particulars of vessel[1]

Name of vessel .....

Distinctive number or letters .....

Port of registry .....

Length (L) (regulation I/2(5))/
Gross tonnage (regulation I/2(22))[2] .....

Sea areas in which vessel is certified to operate (regulation IX/2) .....

Date of building or major conversion contract .....

Date on which keel was laid or vessel was at a similar stage of construction in accordance with regulation I/2(1)(c)(ii) or (1)(c)(iii) .....

Date of delivery or completion of major conversion .....

---

(1) Alternatively, the particulars of the vessel may be placed horizontally in boxes.

(2) Delete as appropriate.

THIS IS TO CERTIFY:

1.1 That the vessel has been surveyed in accordance with the requirements of regulations I/7, I/8 and I/9 of the Protocol.

1.2 That the vessel is/is not[2] subject to annual surveys required in regulations I/7(1)(d) and I/9(1)(d) of the Protocol.

2 That the survey showed that:

2.1 the condition of the structure, machinery and equipment as defined in regulation I/9 was satisfactory and the vessel complied with the relevant requirements of chapters II, III, IV, V and VI of the Protocol (other than those relating to fire safety systems and appliances and fire control plans);

2.2 the last two inspections of the outside of the vessel's bottom took place on

..... (date) and ..... (date)

2.3 the vessel complied with the requirements of the Protocol as regards fire safety systems and appliances and fire control plans;

2.4 the life-saving appliances and the equipment of the lifeboats, liferafts and rescue boats were provided in accordance with the requirements of the Protocol;

2.5 the vessel was provided with a line-throwing appliance and radio installations used in life-saving appliances in accordance with the requirements of the Protocol;

2.6 the vessel complied with the requirements of the Protocol as regards radio installations;

2.7 the functioning of the radio installations used in life-saving appliances complied with the requirements of the Protocol;

2.8 the vessel complied with the requirements of the Protocol as regards shipborne navigational equipment, means of pilot transfer arrangements and nautical publications;

2.9 the vessel was provided with lights, shapes, means of making sound signals and distress signals in accordance with the requirements of the Protocol and the International Regulations for Preventing Collisions at Sea in force;

2.10 in all other respects the vessel complied with the relevant requirements of the Protocol.

3 That an International Fishing Vessel Exemption Certificate has/has not[2] been issued.

---

(2) Delete as appropriate.

This certificate is valid until .....[3] subject to the annual, intermediate and periodical surveys and inspections of the outside of the vessel's bottom in accordance with regulations I/7, I/8 and I/9 of the Protocol.

Issued at .....
(Place of issue of certificate)

.....
(Date of issue)

.....
(Signature of authorized official issuing the certificate)

(Seal or stamp of the issuing authority, as appropriate)

---

(3) Insert the date of expiry as specified by the Administration in accordance with regulation I/13(1) of the Protocol. The day and the month of this date correspond to the anniversary date as defined in regulation I/2(23), unless amended in accordance with regulation I/13(7).

Endorsement for annual and intermediate surveys relating to structure, machinery and equipment referred to in paragraph 2.1 of this certificate

THIS IS TO CERTIFY that, at a survey required by regulation I/9 of the Protocol, the vessel was found to comply with the relevant requirements of the Protocol.

Annual survey:

Signed: .....
(Signature of authorized official)
Place: .....
Date: .....

(Seal or stamp of the authority, as appropriate)

Annual/Intermediate[2] survey:

Signed: .....
(Signature of authorized official)
Place: .....
Date: .....

(Seal or stamp of the authority, as appropriate)

Annual/Intermediate[2] survey:

Signed: .....
(Signature of authorized official)
Place: .....
Date: .....

(Seal or stamp of the authority, as appropriate)

Annual survey:

Signed: .....
(Signature of authorized official)
Place: .....
Date: .....

(Seal or stamp of the authority, as appropriate)

Annual/intermediate survey in accordance with regulation I/13(7)(c)

THIS IS TO CERTIFY that, at an annual/intermediate[2] survey in accordance with regulations I/9 and I/13(7)(c) of the Protocol, the vessel was found to comply with the relevant requirements of the Protocol.

Signed: .....
(Signature of authorized official)
Place: .....
Date: .....

(Seal or stamp of the authority, as appropriate)

---

(2) Delete as appropriate.

Endorsement for inspections of the outside of the vessel's bottom[4]

THIS IS TO CERTIFY that, at an inspection required by regulation I/9 of the Protocol, the vessel was found to comply with the relevant requirements of the Protocol.

First inspection:

Signed: .....
(Signature of authorized official)
Place: .....
Date: .....

(Seal or stamp of the authority, as appropriate)

Second inspection:

Signed: .....
(Signature of authorized official)
Place: .....
Date: .....

(Seal or stamp of the authority, as appropriate)

Endorsement for annual and periodical surveys relating to life-saving appliances and other equipment referred to in paragraphs 2.3, 2.4, 2.5, 2.8 and 2.9 of this certificate

THIS IS TO CERTIFY that, at a survey required by regulation I/7 of the Protocol, the vessel was found to comply with the relevant requirements of the Protocol.

Annual survey:

Signed: .....
(Signature of authorized official)
Place: .....
Date: .....

(Seal or stamp of the authority, as appropriate)

Annual/Periodical[2] survey:

Signed: .....
(Signature of authorized official)
Place: .....
Date: .....

(Seal or stamp of the authority, as appropriate)

Annual/Periodical[2] survey:

Signed: .....
(Signature of authorized official)
Place: .....
Date: .....

(Seal or stamp of the authority, as appropriate)

---

(4) Provision may be made for additional inspections.

(2) Delete as appropriate.

Annual survey:

Signed: .....
(Signature of authorized official)
Place: .....
Date: .....

(Seal or stamp of the authority, as appropriate)

Annual/periodical survey in accordance with regulation I/13(7)(c)

THIS IS TO CERTIFY that, at an annual/periodical[2] survey in accordance with regulations I/7 and I/13(7)(c) of the Protocol, the vessel was found to comply with the relevant requirements of the Protocol.

Signed: .....
(Signature of authorized official)
Place: .....
Date: .....

(Seal or stamp of the authority, as appropriate)

Endorsement for periodical surveys relating to radio installations referred to in paragraphs 2.6 and 2.7 of this certificate

THIS IS TO CERTIFY that, at a survey required by regulation I/8 of the Protocol, the vessel was found to comply with the relevant requirements of the Protocol.

Periodical survey:

Signed: .....
(Signature of authorized official)
Place: .....
Date: .....

(Seal or stamp of the authority, as appropriate)

Periodical survey:

Signed: .....
(Signature of authorized official)
Place: .....
Date: .....

(Seal or stamp of the authority, as appropriate)

Periodical survey:

Signed: .....
(Signature of authorized official)
Place: .....
Date: .....

(Seal or stamp of the authority, as appropriate)

---

(2) Delete as appropriate.

Periodical survey: Signed: .....
(Signature of authorized official)
Place: .....
Date: .....

(Seal or stamp of the authority, as appropriate)

Periodical survey in accordance with regulation I/13(7)(c)

THIS IS TO CERTIFY that, at a periodical survey in accordance with regulations I/8 and I/13(7)(c) of the Protocol, the vessel was found to comply with the relevant requirements of the Protocol.

Signed: .....
(Signature of authorized official)
Place: .....
Date: .....

(Seal or stamp of the authority, as appropriate)

Endorsement to extend the certificate if valid for less than 5 years where regulation I/13(3) applies

The vessel complies with the relevant requirements of the Protocol, and this certificate shall, in accordance with regulation I/13(3) of the Protocol, be accepted as valid until .....

Signed: .....
(Signature of authorized official)
Place: .....
Date: .....

(Seal or stamp of the authority, as appropriate)

Endorsement where the renewal survey has been completed and regulation I/13(4) applies

The vessel complies with the relevant requirements of the Protocol, and this certificate shall, in accordance with regulation I/13(4) of the Protocol, be accepted as valid until .....

Signed: .....
(Signature of authorized official)
Place: .....
Date: .....

(Seal or stamp of the authority, as appropriate)

Endorsement to extend the validity of the certificate until reaching the port of survey or for a period of grace where regulation I/13(5) applies

The certificate shall, in accordance with regulation I/13(5) of the Protocol, be accepted as valid until .....

Signed: .....
(Signature of authorized official)
Place: .....
Date: .....

(Seal or stamp of the authority, as appropriate)

Endorsement for advancement of anniversary date where regulation I/13(7) applies

In accordance with regulation I/13(7) of the Protocol, the new anniversary date is .....

Signed: .....
(Signature of authorized official)
Place: .....
Date: .....

(Seal or stamp of the authority, as appropriate)

In accordance with regulation I/13(7) of the Protocol, the new anniversary date is .....

Signed: .....
(Signature of authorized official)
Place: .....
Date: .....

(Seal or stamp of the authority, as appropriate)

2 Form of Exemption Certificate

INTERNATIONAL FISHING VESSEL EXEMPTION CERTIFICATE

(Official seal) (State)

Issued under the provisions of the
Cape Town Agreement of 2012 on the Implementation of the Provisions of the
Torremolinos Protocol of 1993 relating to the
Torremolinos International Convention for the Safety of Fishing Vessels, 1977

under the authority of the Government of

.....
(name of the State)

by .....
(person or organization authorized)

Particulars of vessel[1]

Name of vessel .....
Distinctive number or letters .....
Port of registry .....
Length (L) (regulation I/2(5))/
Gross tonnage (regulation I/2(22))[2] .....

THIS IS TO CERTIFY:

That the vessel is, under the authority conferred by regulation .....
exempted from the requirements of .....

Conditions, if any, on which the Exemption Certificate is granted:

This certificate is valid until ..... subject to the International Fishing Vessel Safety Certificate, to which this certificate is attached, remaining valid.

Issued at .....
(Place of issue of certificate)

....
(Date of issue) (Signature of authorized official issuing the certificate)

(Seal or stamp of the issuing authority, as appropriate)

---

(1) Alternatively, the particulars of the ship may be placed horizontally in boxes.

(2) Delete as appropriate.

Endorsement to extend the certificate if valid for less than 5 years where regulation I/13(3) applies

This certificate shall, in accordance with regulation I/13(3) of the Protocol, be accepted as valid until ..... subject to the International Fishing Vessel Safety Certificate, to which this certificate is attached, remaining valid.

Signed: .....
(Signature of authorized official)
Place: .....
Date: .....

(Seal or stamp of the authority, as appropriate)

Endorsement where the renewal survey has been completed and regulation I/13(4) applies

This certificate shall, in accordance with regulation I/13(4) of the Protocol, be accepted as valid until ..... subject to the International Fishing Vessel Safety Certificate, to which this certificate is attached, remaining valid.

Signed: .....
(Signature of authorized official)
Place: .....
Date: .....

(Seal or stamp of the authority, as appropriate)

Endorsement to extend the validity of the certificate until reaching the port of survey or for a period of grace where regulation I/13(5) applies

The certificate shall, in accordance with regulation I/13(5) of the Protocol, be accepted as valid until ..... subject to the International Fishing Vessel Safety Certificate, to which this certificate is attached, remaining valid.

Signed: .....
(Signature of authorized official)
Place: .....
Date: .....

(Seal or stamp of the authority, as appropriate)

3 Form of Supplement to the International Fishing Vessel Safety Certificate

RECORD OF EQUIPMENT FOR THE INTERNATIONAL FISHING VESSEL SAFETY CERTIFICATE

This Record shall be permanently attached to the International Fishing Vessel Safety Certificate.

RECORD OF EQUIPMENT FOR COMPLIANCE WITH THE CAPE TOWN AGREEMENT OF 2012 ON THE IMPLEMENTATION OF THE PROVISIONS OF THE TORREMOLINOS PROTOCOL OF 1993 RELATING TO THE TORREMOLINOS INTERNATIONAL CONVENTION FOR THE SAFETY OF FISHING VESSELS, 1977

1 Particulars of vessel

Name of vessel .....

Distinctive number or letters .....

Port of registry .....

Length (L) (regulation I/2(5))/
Gross tonnage (regulation I/2(22))[1] .....

2 Details of life-saving appliances

1	Total number of persons for whom life-saving appliances are provided	.....	
		Port side	Starboard side
2	Total number of lifeboats	.....	.....
2.1	Total number of persons accommodated by them	.....	.....
2.2	Number of partially enclosed lifeboats (regulation VII/18)	.....	.....
2.3	Number of totally enclosed lifeboats (regulation VII/19)	.....	.....

(1) Delete as appropriate.

3	Number of rescue boats	.....
3.1	Number of boats which are included in the total lifeboats shown above	.....
4	Liferafts	.....
4.1	Those for which approved launching appliances are required	.....
4.1.1	Number of liferafts	.....
4.1.2	Number of persons accommodated by them	.....
4.2	Those for which approved launching appliances are not required	.....
4.2.1	Number of liferafts	.....
4.2.2	Number of persons accommodated by them	.....
5	Number of lifebuoys	.....
6	Number of lifejackets	.....
7	Immersion suits	.....
7.1	Total number	.....
7.2	Number of suits complying with the requirements for lifejackets	.....
8	Number of thermal protective aids[2]	.....
9	Radio installations used in life-saving appliances	.....
9.1	Number of radar transponders	.....
9.2	Number of two-way VHF radiotelephone apparatus	.....

(2) Excluding those required by regulations VII/17(8)(xxxi), VII/20(5)(a)(xxiv) and VII/23(2)(b)(xiii).

3 Details of radio facilities

	Item	Actual provision
1	Primary systems	
1.1	VHF radio installation:	
1.1.1	DSC encoder	.....
1.1.2	DSC watch receiver	.....
1.1.3	Radiotelephony	.....
1.2	MF radio installation:	
1.2.1	DSC encoder	.....
1.2.2	DSC watch receiver	.....
1.2.3	Radiotelephony	.....
1.3	MF/HF radio installation:	
1.3.1	DSC encoder	.....
1.3.2	DSC watch receiver	.....
1.3.3	Radiotelephony	.....
1.3.4	Direct-printing radiotelegraphy	.....
1.4	INMARSAT ship earth station	.....
2	Secondary means of alerting	.....
3	Facilities for reception of maritime safety information	
3.1	NAVTEX receiver	.....
3.2	EGC receiver	.....
3.3	HF direct-printing radiotelegraph receiver	.....
4	Satellite EPIRB	
4.1	COSPAS-SARSAT	.....
4.2	INMARSAT	.....
5	VHF EPIRB	.....
6	Vessel's radar transponder	.....

4 Methods used to ensure availability of radio facilities (regulation IX/14)

4.1	Duplication of equipment	.....
4.2	Shore-based maintenance	.....
4.3	At-sea maintenance capability	.....

THIS IS TO CERTIFY that this Record is correct in all respects

Issued at .....
(Place of issue of the Record)

....
(Date of issue) (Signature of duly authorized official issuing the Record)

(Seal or stamp of the issuing authority, as appropriate)

ATTACHMENT 1

ARTICLES OF THE CAPE TOWN AGREEMENT OF 2012 ON THE IMPLEMENTATION OF THE PROVISIONS OF THE TORREMOLLINOS PROTOCOL OF 1993 RELATING TO THE INTERNATIONAL CONVENTION FOR THE SAFETY OF FISHING VESSELS, 1977

THE PARTIES TO THIS AGREEMENT,

RECOGNIZING the significant contribution to maritime safety in general and that of fishing vessels which can be made by implementation of the provisions of the Torremolinos Protocol of 1993 relating to the Torremolinos International Convention for the Safety of Fishing Vessels, 1977,

ACKNOWLEDGING, HOWEVER, that certain provisions of the Torremolinos Protocol of 1993 relating to the Torremolinos International Convention for the Safety of Fishing Vessels, 1977, have given rise to difficulties in their implementation by a number of States having substantial fishing fleets under their flags and that this has prevented the entry into force of that Protocol and, consequently, the implementation of the regulations contained therein,

DESIRING to establish by common agreement for the highest practicable standards for the safety of fishing vessels that can be implemented by all the States concerned,

CONSIDERING that this objective may best be achieved by the conclusion of an Agreement relating to the implementation of the provisions of the Torremolinos Protocol of 1993 relating to the Torremolinos International Convention for the Safety of Fishing Vessels, 1977,

HAVE AGREED as follows:

Article 1
General obligations

(1) The Parties to this Agreement shall give effect to the provisions of:

(a) the articles of this Agreement; and

(b) the Torremolinos Protocol of 1993 relating to the Torremolinos International Convention for the Safety of Fishing Vessels, 1977 (hereinafter referred to as the "1993 Torremolinos Protocol"), with the exception of article 1, paragraphs (1)(a), (2) and (3), article 9 and article 10 of that Protocol, as modified by this Agreement.

(2) The articles of this Agreement, articles 2 to 8 and 11 to 14 of the 1993 Torremolinos Protocol, the regulations in the annex to the 1993 Torremolinos Protocol, and the regulations in the annex to the Torremolinos International Convention for the Safety of Fishing Vessels, 1977 (hereinafter referred to as the "1977 Torremolinos Convention"), shall, subject to the modifications set out in this Agreement, be read and interpreted as a single instrument.

(3) The annex to this Agreement shall constitute an integral part of the Agreement and a reference to this Agreement shall constitute at the same time a reference to the annex thereto.

Article 2
Interpretation and application of the 1993 Torremolinos Protocol and the 1977 Torremolinos Convention

Articles 2 to 8 inclusive and articles 11 to 14 inclusive of the 1993 Torremolinos Protocol shall apply to this Agreement. In applying these articles, the regulations in the annex to the 1993 Torremolinos Protocol, and the regulations in the annex to the 1977 Torremolinos Convention, a reference to "the present Protocol", or to "the Convention", respectively, shall be deemed to mean a reference to this Agreement.

Article 3
Signature, ratification, acceptance, approval and accession

(1) This Agreement shall remain open for signature at the Headquarters of the Organization from 11 February 2013 to 10 February 2014 and shall thereafter remain open for accession.

(2) All States may become Parties to this Agreement by expressing their consent to be bound by the Agreement by:

(a) signature without reservation as to ratification, acceptance or approval; or

(b) signature subject to ratification, acceptance or approval followed by ratification, acceptance or approval; or

(c) signature subject to the procedure set out in paragraph (4) of this article; or

(d) accession.

(3) Ratification, acceptance, approval or accession shall be effected by the deposit of an instrument to that effect with the Secretary-General.

(4) A State which has deposited before the date of the adoption of this Agreement an instrument of ratification, acceptance, approval of or accession to the 1993 Torremolinos Protocol and which has signed this Agreement in accordance with paragraph (2)(c) of this article shall be deemed to have expressed its consent to be bound by this Agreement 12 months after the date of the adoption of this Agreement unless that State notifies the depositary in writing before that date that it is not availing itself of the simplified procedure set out in this paragraph.

Article 4
Entry into force

(1) This Agreement shall enter into force 12 months after the date on which not less than 22 States the aggregate number of whose fishing vessels of 24 m in length and over operating on the high seas is not less than 3,600 have expressed their consent to be bound by it.[63]

(2) For a State which deposits an instrument of ratification, acceptance, approval or accession in respect of this Agreement after the requirements for entry into force thereof have been met but prior to the date of entry into force, the ratification, acceptance, approval

---

63 Refer to the *Procedure for calculating the number of fishing vessels of each Contracting State to the 2012 Cape Town Agreement*, adopted by the Maritime Safety Committee of the Organization by resolution MSC.364(92).

or accession shall take effect on the date of entry into force of this Agreement or three months after the date of deposit of the instrument, whichever is the later date.

(3) For a State which deposits an instrument of ratification, acceptance, approval or accession in respect of this Agreement after the date on which it enters into force, this Agreement shall take effect three months after the date of deposit of the instrument.

(4) After the date on which an amendment to this Agreement is deemed to have been accepted under article 11 of the 1993 Torremolinos Protocol, as applied to this Agreement pursuant to article 2, any instrument of ratification, acceptance, approval or accession deposited shall apply to this Agreement as amended.

IN WITNESS WHEREOF the undersigned, being duly authorized by their respective Governments for that purpose, have signed this Agreement.

DONE AT CAPE TOWN this eleventh day of October two thousand and twelve.

ATTACHMENT 2

ARTICLES OF THE TORREMOLINOS PROTOCOL OF 1993 RELATING TO THE TORREMOLINOS INTERNATIONAL CONVENTION FOR THE SAFETY OF FISHING VESSELS, 1977

THE PARTIES TO THE PRESENT PROTOCOL,

RECOGNIZING the significant contribution which can be made by the Torremolinos International Convention for the Safety of Fishing Vessels, 1977, to the safety of ships in general and to the safety of fishing vessels in particular,

ACKNOWLEDGING HOWEVER that certain provisions of the Torremolinos International Convention for the Safety of Fishing Vessels, 1977, have given rise to difficulties in their implementation by a number of States with substantial fishing fleets under their flags and that this has prevented the entry into force of the Torremolinos International Convention for the Safety of Fishing Vessels, 1977, and consequently the implementation of the regulations contained therein,

DESIRING to establish in common agreement the highest practicable standards for the safety of fishing vessels which can be implemented by all States concerned,

CONSIDERING that this objective may best be achieved by the conclusion of a Protocol relating to the Torremolinos International Convention for the Safety of Fishing Vessels, 1977,

HAVE AGREED as follows:

Article 1
General obligations

(1) The Parties to the present Protocol shall give effect to the provisions of:

(a) the articles of the present Protocol; and

(b) the regulations contained in the annex to the Torremolinos International Convention for the Safety of Fishing Vessels, 1977 (hereinafter referred to as "the Convention"), subject to the modifications set out in the annex to the present Protocol.

(2) The articles of the present Protocol and the regulations of the annex to the Convention shall, subject to the modifications set out in the annex to the present Protocol, be read and interpreted as one single instrument.

(3) The annex to the present Protocol shall constitute an integral part of the Protocol and a reference to the present Protocol shall constitute at the same time a reference to the annex hereto.

Article 2
Definitions

For the purpose of the present Protocol, unless expressly provided otherwise:

(a) *Party* means a State for which the present Protocol has entered into force.

(b) *Fishing vessel* or *vessel* means any vessel used commercially for catching fish, whales, seals, walrus or other living resources of the sea.

(c) *Organization* means the International Maritime Organization.

(d) *Secretary-General* means the Secretary-General of the Organization.

(e) *Administration* means the Government of the State whose flag the vessel is entitled to fly.

(f) *Regulations* means the regulations contained in the annex to the Convention as modified by the present Protocol.

Article 3
Application

(1) The present Protocol shall apply to seagoing fishing vessels including vessels also processing their catch entitled to fly the flag of a Party.

(2) The provisions of the annex shall not apply to vessels exclusively used:

(a) for sport or recreation;

(b) for processing fish or other living resources of the sea;

(c) for research and training; or

(d) as fish carriers.

(3) Unless expressly provided otherwise, the provisions of the annex shall apply to fishing vessels of 24 metres in length and over.

(4) In a case where a limit of the vessel's length is prescribed as greater than 24 metres in a chapter for the application of that chapter, the Administration shall determine which regulations of that chapter should apply, wholly or in part, to a fishing vessel of 24 metres in length and over but less than the length limit prescribed in that chapter and entitled to fly the flag of that State, having regard to the type, size and mode of operation of such a vessel.

(5) Parties shall endeavour to establish, as a matter of high priority, uniform standards to be applied by Administrations to fishing vessels referred to in paragraph (4), which operate in the same region, taking into account the mode of operation, sheltered nature and climatic conditions in such region. Such uniform regional standards shall be communicated to the Organization for circulation to other Parties for information.

Article 4
Certification and port State control

(1) Every vessel required to hold a certificate in accordance with the provisions of the regulations is subject, when in a port of another Party, to control by officers duly authorized by the Government of that Party in so far as this control is directed towards verifying that the certificate issued under the provisions of the relevant regulations is valid.

(2) Such certificate, if valid, shall be accepted unless there are clear grounds for believing that the condition of the vessel or of its equipment does not correspond substantially with the particulars of that certificate or that the vessel and its equipment are not in compliance with the provisions of the relevant regulations.

(3) In the circumstances given in paragraph (2) or where a certificate has expired or ceased to be valid, the officer carrying out the control shall take steps to ensure that the vessel shall not sail until it can proceed to sea or leave the port for the purpose of proceeding to the appropriate repair yard without danger to the vessel or persons on board.

(4) In the event of this control giving rise to an intervention of any kind, the officer carrying out the control shall forthwith inform, in writing, the Consul or, in his absence, the nearest diplomatic representative of the State whose flag the vessel is entitled to fly, of all the circumstances in which intervention was deemed necessary. In addition, nominated surveyors or recognized organizations responsible for the issue of the certificates shall also be notified. The facts concerning the intervention shall be reported to the Organization.

(5) If the port State authority concerned is unable to take steps as specified in paragraph (3) or if the vessel has been allowed to proceed to the next port of call, the port State authority concerned shall notify all relevant information about the vessel to the Party mentioned in paragraph (4) and to the authorities of the next port of call.

(6) When exercising control under this article, all possible efforts shall be made to avoid a vessel being unduly detained or delayed. If a vessel is thereby unduly detained or delayed, it shall be entitled to compensation for any loss or damage suffered.

(7) With respect to vessels of non-Parties to the present Protocol, Parties shall apply the requirements of the present Protocol as may be necessary to ensure that no more favourable treatment is given to such vessels.

Article 5
Force majeure

(1) A vessel which is not subject to the provisions of the present Protocol or which is not required to hold a certificate in accordance with the provisions of the present Protocol at the time of its departure on any voyage shall not become subject to such provisions on account of any deviation from its intended voyage due to stress of weather or any other cause of *force majeure.*

(2) Persons who are on board a vessel by reason of *force majeure* or in consequence of the obligation to carry shipwrecked or other persons shall not be taken into account for the purpose of ascertaining the application to the vessel of any provisions of the present Protocol.

Article 6
Communication of information

(1) The Parties shall communicate to the Organization:

(a) the text of laws, orders, decrees, regulations and other instruments which have been promulgated on the various matters within the scope of the present Protocol;

(b) a list of non-governmental agencies which are authorized to act on their behalf in matters relating to the design, construction and equipment of vessels in accordance with the provisions of the present Protocol; and

(c) a sufficient number of specimens of their certificates issued under the provisions of the present Protocol.

(2) The Organization shall notify all Parties of the receipt of any communication under paragraph (1)(a) and shall circulate to them any information communicated to it under paragraphs (1)(b) and (1)(c).

Article 7
Casualties to fishing vessels

(1) Each Party shall arrange for an investigation of any casualty occurring to any of its vessels subject to the provisions of the present Protocol, when it judges that such an investigation may assist in determining what changes in the present Protocol might be desirable.

(2) Each Party shall supply the Organization with pertinent information concerning the findings of such investigations for circulation to all Parties. No reports or recommendations of the Organization based upon such information shall disclose the identity or nationality of the vessels concerned or in any manner fix or imply responsibility upon any vessel or person.

Article 8
Other treaties and interpretation

Nothing in the present Protocol shall prejudice the present or future claims and legal views of any State concerning the law of the sea and the nature and extent of coastal and flag State jurisdiction.

Article 9
Signature, ratification, acceptance, approval and accession

(1) The present Protocol shall remain open for signature at the Headquarters of the Organization from 1 July 1993 until 30 June 1994 and shall thereafter remain open for accession. All States may become Parties to the present Protocol by:

(a) signature without reservation as to ratification, acceptance or approval; or

(b) signature subject to ratification, acceptance or approval, followed by ratification, acceptance or approval; or

(c) accession.

(2) Ratification, acceptance, approval or accession shall be effected by the deposit of an instrument to that effect with the Secretary-General.

(3) Each State which has either signed the present Protocol without reservation as to ratification, acceptance or approval or has deposited the requisite instruments of ratification, acceptance, approval or accession in accordance with this article shall transmit to the Secretary-General, at the time of deposit of the above instrument and by the end of each year, information on the aggregate number of fishing vessels of 24 metres in length and over entitled to fly the flag of that State.

Article 10
Entry into force

(1) The present Protocol shall enter into force 12 months after the date on which not less than 15 States have either signed it without reservation as to ratification, acceptance or approval or have deposited the requisite instruments of ratification, acceptance, approval or

accession in accordance with article 9, the aggregate number of whose fishing vessels of 24 metres in length and over is not less than 14,000.

(2) For States which have deposited an instrument of ratification, acceptance, approval or accession in respect of the present Protocol after the requirements for entry into force thereof have been met but prior to the date of entry into force, the ratification, acceptance, approval or accession shall take effect on the date of entry into force of the present Protocol or three months after the date of deposit of the instrument, whichever is the later date.

(3) For States which have deposited an instrument of ratification, acceptance, approval or accession after the date on which the present Protocol entered into force, the present Protocol shall become effective three months after the date of deposit of the instrument.

(4) After the date on which an amendment to the present Protocol is deemed to have been accepted under article 11, any instrument of ratification, acceptance, approval or accession deposited shall apply to the present Protocol as amended.

Article 11
Amendments

(1) The present Protocol may be amended by either of the procedures specified in this article.

(2) Amendment after consideration within the Organization:

(a) Any amendment proposed by a Party shall be submitted to the Secretary-General, who shall then circulate it to all Members of the Organization and to all the Parties at least six months prior to its consideration.

(b) Any amendment proposed and circulated as above shall be referred to the Maritime Safety Committee of the Organization for consideration.

(c) Parties whether or not Members of the Organization shall be entitled to participate in the proceedings of the Maritime Safety Committee for the consideration and adoption of amendments.

(d) Amendments shall be adopted by a two-thirds majority of the Parties present and voting in the Maritime Safety Committee expanded as provided for in paragraph (2)(c) (hereinafter referred to as ``the expanded Maritime Safety Committee'') on condition that at least one third of the Parties shall be present at the time of voting.

(e) Amendments adopted in accordance with paragraph (2)(d) shall be communicated by the Secretary-General to all the Parties.

(f) (i) An amendment to an article shall be deemed to have been accepted on the date on which it is accepted by two thirds of the Parties.

(ii) An amendment to the annex shall be deemed to have been accepted:

(aa) at the end of two years from the date of adoption; or

(bb) at the end of a different period, which shall not be less than one year, if so determined at the time of its adoption by a two-thirds majority of the Parties present and voting in the expanded Maritime Safety Committee.

However, if within the specified period either more than one third of the Parties or Parties the aggregate number of whose fishing vessels is not less than 65 per cent of the number of fishing vessels of 24 metres in length and over of all the Parties, notify the Secretary-General that they object to the amendment, it shall be deemed not to have been accepted.

(g) (i) An amendment to an article shall enter into force, with respect to those Parties which have accepted it, six months after the date on which it is deemed to have been accepted and, with respect to each Party which accepts it after that date, six months after the date of that Party's acceptance.

(ii) An amendment to the annex shall enter into force with respect to all Parties, except those which have objected to the amendment under paragraph (2)(f)(ii) and which have not withdrawn such objections, six months after the date on which it is deemed to have been accepted. However, before the date set for entry into force any Party may give notice to the Secretary-General that it exempts itself from giving effect to that amendment for a period not longer than one year from the date of its entry into force, or for such longer period as may be determined by a two-thirds majority of the Parties present and voting in the expanded Maritime Safety Committee at the time of the adoption of the amendment.

(3) Amendment by a Conference:

(a) Upon the request of a Party concurred with by at least one third of the Parties, the Organization shall convene a conference of the Parties to consider amendments to the present Protocol.

(b) Every amendment adopted by such a conference by a two-thirds majority of the Parties present and voting shall be communicated by the Secretary-General to all the Parties for acceptance.

(c) Unless the Conference decides otherwise, the amendment shall be deemed to have been accepted and shall enter into force in accordance with the procedures specified in paragraphs (2)(f) and (2)(g) respectively, provided that references in those paragraphs to the expanded Maritime Safety Committee shall be taken to mean references to the Conference.

(4) (a) A Party, which has accepted an amendment to the annex which has entered into force, shall not be obliged to extend the benefit of the present Protocol in respect of the certificates issued to a vessel entitled to fly the flag of a State the Government of which, pursuant to the provisions of paragraph (2)(f)(ii) of this article, has objected to the amendment and has not withdrawn such an objection, but only to the extent that such certificates relate to matters covered by the amendment in question.

(b) A Party, which has accepted an amendment to the annex which has entered into force, shall extend the benefit of the present Protocol in respect of certificates issued to a vessel entitled to fly the flag of a State the Government of which, pursuant to the provisions of paragraph (2)(g)(ii) of this article, has notified the Secretary-General of the Organization that it exempts itself from giving effect to the amendment.

(5) Unless expressly provided otherwise, any amendment to the present Protocol which relates to the structure of a vessel shall apply only to vessels for which, on or after the date of entry into force of the amendment:

(a) the keel is laid; or

(b) construction identifiable with a specific vessel begins; or

(c) assembly has commenced comprising at least 50 tonnes or 1 per cent of the estimated mass of all structural material, whichever is less.

(6) Any declaration of acceptance of, or objection to, an amendment or any notice given under paragraph (2)(g)(ii) shall be submitted in writing to the Secretary-General who shall inform all the Parties of any such submission and of the date of its receipt.

(7) The Secretary-General shall inform all the Parties of any amendments which enter into force under this article together with the date on which each such amendment enters into force.

Article 12
Denunciation

(1) The present Protocol may be denounced by any Party at any time after the expiry of five years from the date on which the present Protocol enters into force for that Party.

(2) Denunciation shall be effected by notification in writing to the Secretary-General.

(3) A denunciation shall take effect 12 months after receipt of the denunciation by the Secretary-General or after the expiry of any longer period which may be indicated in the notification.

Article 13
Depositary

(1) The present Protocol shall be deposited with the Secretary-General of the Organization (hereinafter referred to as the "Depositary").

(2) The Depositary shall:

(a) inform the Governments of all States which have signed the present Protocol or acceded thereto of:

(i) each new signature or deposit of an instrument of ratification, acceptance, approval or accession, together with the date thereof;

(ii) the date of entry into force of the present Protocol;

(iii) the deposit of any instrument of denunciation of the present Protocol together with the date on which it was received and the date on which the denunciation takes effect;

(b) transmit certified true copies of the present Protocol to the Governments of all States which have signed the present Protocol or acceded thereto.

(3) As soon as the present Protocol enters into force, a certified true copy thereof shall be transmitted by the Depositary to the Secretary-General of the United Nations for registration and publication in accordance with Article 102 of the Charter of the United Nations.

Article 14
Languages

The present Protocol is established in a single original in the Arabic, Chinese, English, French, Russian and Spanish languages, each text being equally authentic.

IN WITNESS WHEREOF the undersigned, being duly authorized by their respective Governments for that purpose, have signed the present Protocol.

DONE AT TORREMOLINOS this second day of April one thousand nine hundred and ninety-three.

ATTACHMENT 3

RECOMMENDATIONS OF THE INTERNATIONAL CONFERENCE ON SAFETY OF FISHING VESSELS, 1993

(References to regulations are references to regulations in the annex to the Torremolinos Protocol of 1993 relating to the Torremolinos International Convention for the Safety of Fishing Vessels, 1977)

1 Guidance on a method of calculation of the effect of water on deck (regulation III/6)

(1) The ability of the vessel to withstand the heeling effect due to the presence of water on deck should be demonstrated by a quasi-static method, with reference to figure 1, when the following condition is satisfied with the vessel in the worst operating condition:

$$\text{Ratio } C_{wod} = \frac{area\ a}{area\ b} \text{ should not be less than unity.}$$

(2) The angle which limits area *b* should be equal to the flooding angle Θ_f or 40°, whichever is the less.

(3) The value of the heeling moment M_{wod} (or the corresponding heeling arm) due to the presence of water on deck should be determined assuming that the deck well is filled to the top of the bulwark at its lowest point and the vessel heeled up to the angle at which this point is immersed. For the determination of M_{wod} the following formula should be used:

$$M_{wod} = K\, M_w$$

where:

M_w= static heeling moment due to water on deck

K = coefficient

(a) If M_{wod} is determined by a static approach, K = 1 may be applied.

(b) If M_{wod} is determined by a quasi-static approach, K may take into account the rolling period of the vessel and the dynamic effect of the water flow, including the effect of the disposition and configuration of deck wells and deckhouses. The value of K should be satisfactory, taking into account the type of vessel, area of operation, etc. For vessels, where the angle of deck edge immersion Θ_D is less than 10° to 15°, or the angle of bulwark top immersion Θ_B is less than 20° to 25°, a value for K greater than 1 may be applied. When Θ_D is greater than 20° or Θ_B greater than 30°, a value for K less than 1 may be applied.

(4) When calculating M_w the following assumptions should be made:

(a) at the beginning the vessel is in the upright condition;

(b) during heeling, trim and displacement are constant and equal to the values for the vessel without the water on deck;

(c) the effect of freeing ports should be ignored.

(5) The above provisions may be adjusted, taking into account the seasonal weather conditions and sea states in the areas in which the vessel will operate, the type of vessel and its mode of operation.

(6) Other methods for the calculation of the effect of water on deck using the dynamic approach may be adopted.

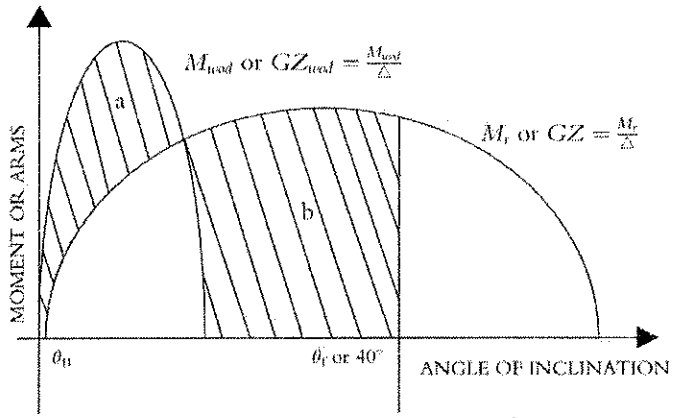

Figure 1 – Water on deck

2 Guidance relating to ice accretion (regulation III/8)

In the application of regulation III/8, the following icing areas should apply:

(1) (a) The area north of latitude 65°30'N, between longitude 28°W and the west coast of Iceland; north of the north coast of Iceland; north of the rhumb line running from latitude 66°N, longitude 15°W to latitude 73°30'N, longitude 15°E, north of latitude 73°30'N between longitude 15°E and 35°E, and east of longitude 35°E, as well as north of latitude 56°N in the Baltic Sea.

(b) The area north of latitude 43°N bounded in the west by the North American coast and the east by the rhumb line running from latitude 43°N longitude 48°W to latitude 63°N longitude 28°W and thence along longitude 28°W.

(c) All sea areas north of the North American continent, west of the areas defined in subparagraphs (a) and (b) of this paragraph.

(d) The Bering and Okhotsk Seas and the Tartary Strait during the icing season.

(e) South of latitude 60°S.

A chart to illustrate the areas is attached.

(2) For vessels operating in areas where ice accretion may be expected:

(a) Within the areas defined in paragraph (1)(a), (c), (d) and (e) known to having icing conditions significantly different from those in regulation III/8(1), ice accretion requirements of one-half to twice the required allowance may be applied.

(b) Within the area defined in paragraph (1)(b) where ice accretion in excess of twice the allowance required by regulation III/8(1) may be expected, more severe requirements than those given in that paragraph may be applied.

3 Guidance on stability information (regulation III/10)

Stability information provided for the vessel should include:

(1) (a) stability calculations including GZ curves of operating conditions required by regulation III/7;

(b) instructions warning of conditions critical from a stability standpoint. As an example, instructions to keep the ballast tanks full when necessary for adequate stability;

(c) maximum permissible operating draught associated with each operating condition; and

(d) when appropriate, minimum required operating draught.

(2) Information as required by the following alternatives having regard to the type of vessel, intended service, etc.:

(a) If GZ calculations are intended:

(i) information for determination of weights, positions of centres of gravity, the free surface effects of tanks[64], fish-holds and pounds;

(ii) information relating to form stability and hydrostatic parameters; and

(iii) displacement and disposition of centre of gravity of light ship condition, with regard to permanent ballast.

(b) When rolling tests are used:

(i) information for the determination of metacentric height GM_o by means of a rolling test[65]; and

(ii) information giving required minimum metacentric height GM_o for the practical range of draughts.

(c) Simplified information:

Supplementary or alternative information which permits safe operation without recourse to calculations or rolling tests.

---

64 See appendix I(13) of the *Recommendation on Intact Stability of Fishing Vessels*, adopted by the Organization by resolution A.168(ES.IV).

65 See appendix IV of the *Recommendation on Intact Stability of Fishing Vessels*, adopted by the Organization by resolution A.168(ES.IV).

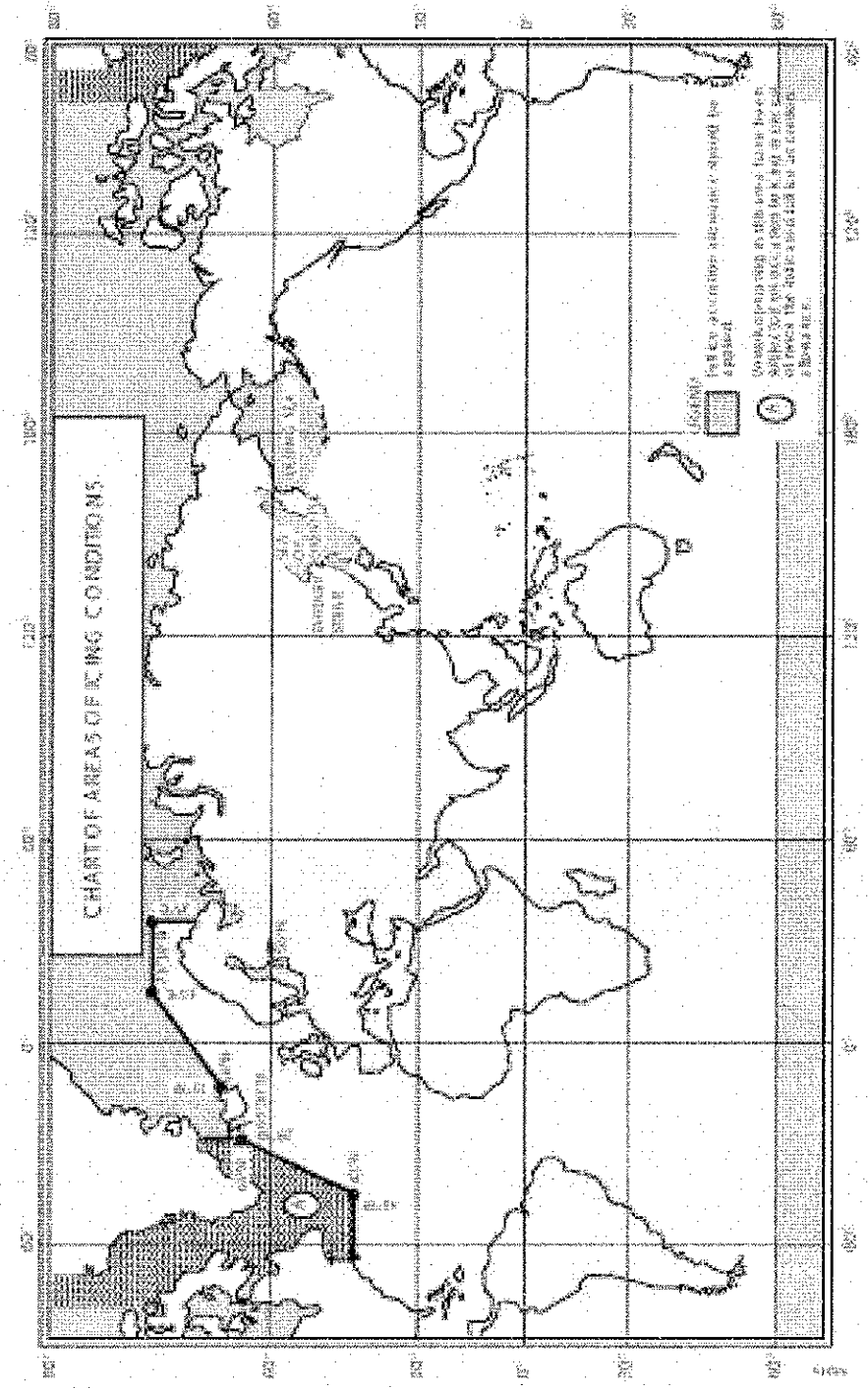
CHART OF AREAS OF ICING CONDITIONS

(3) (a) Instructions for filling and emptying of tanks with free liquid surfaces;

(b) information on the proper use and control of any anti-rolling devices; and

(c) information on the weight and arrangement of permanent ballast.

(4) For vessels to which regulation III/14 applies:

(a) information on the use of ballast and other liquid systems to correct heel and trim;

(b) forms for recording daily tank statements; and

(c) instructions for loading in order to maintain the vessel afloat after flooding.

4 Guidance on a method of calculation of bow height (regulation III/12)

(1) *The bow height* is defined as the minimum vertical distance from the deepest waterline to the top of the highest exposed deck measured at the forward perpendicular.

(2) The determination of the bow height (H_B) required may be based upon the following formula:

$$H_B = K_1 L \left(1 + \frac{L}{K_2}\right)$$

where:

L is the length of the vessel in metres as defined in regulation I/2(5); and

K_1 and K_2 are the coefficients depending upon areas of operation and L as follows:

Area of operation	L	K_2	K_2
Extreme conditions with significant wave height of up to and including 8 m	24 m≤ L < 110 m	0.09	-270
	L ≥ 110 m	4.959/L	600
Extreme conditions with significant wave height above 8 m	24 m≤ L < 110 m	0.117	-220
	L ≥ 110 m	5.991/L	1,484

The Administration should stipulate either of the above or other standard, considering expected sea and weather conditions in particular fishing areas.

(3) Where the bow height required is obtained by sheer, this should extend from the stem for a length of at least 0.15L abaft of the forward perpendicular. Where it is obtained by fitting a forecastle, such forecastle should extend from the stem at least 0.07L abaft the forward perpendicular. However, where the length of the forecastle exceeds 0.15L due consideration should be given to the fitting of a bulkhead with adequate closing appliances. If no such bulkhead is fitted, adequate arrangements should be provided for removing water from the open forecastle.

(4) Where a bulwark is fitted, this may be taken into account for a height of 1 m, provided that the bulwark extends from the stem to a point at least 0.15L abaft the forward perpendicular.

(5) When a vessel is always trimmed by the stern in service conditions, the minimum trim may be allowed in the calculation of the bow height.

5 Guidance on subdivision and damage stability calculations (regulation III/14)

(1) Conditions of equilibrium

(a) The final waterline after damage to any one compartment should be either:

(i) to the line of openings at which progressive flooding to spaces below would occur and to the requirements of the Administration; or

(ii) to the after end of the top of the poop superstructure deck at the centreline, subject to paragraph (3)(a) below.

(b) Unsymmetrical flooding shall be kept to a minimum consistent with efficient arrangements. Where it is necessary to correct large angles of heel, the means adopted shall, where practicable, be self-acting.

(2) Damage assumptions

The following assumed damage should apply:

(a) The vertical extent of damage in all cases is assumed to be from the base line upwards without limit.

(b) The transverse extent of damage is equal to B/5 m, measured inboard from the side of the vessel perpendicularly to the centreline at the level of the deepest operating waterline, where B (in metres) is as defined in regulation I/2(7).

(c) If damage of a lesser extent than specified in subparagraphs (a) and (b) above results in a more severe condition, such lesser extent should be assumed.

(d) The flooding should be restricted to any single compartment between adjacent transverse bulkheads. If there are steps or recesses in a transverse bulkhead of not more than 3.05 m in length located within the transverse extent of assumed damage as defined in subparagraph (b) above, such transverse bulkhead may be considered intact and the adjacent compartments may be floodable singly. Where there exists a step or recess within the transverse extent of assumed damage of more than 3.05 m in length in a transverse bulkhead, the two compartments adjacent to this bulkhead should be considered as flooded. The step formed at the junction of the afterpeak bulkhead and the afterpeak tank top should not be regarded as a step.

(e) Where a main transverse bulkhead is situated within the transverse extent of assumed damage and is stepped in way of a double bottom or side tank by more than 3.05 m, the double bottom or side tanks adjacent to the stepped portion of the main transverse bulkhead should be considered as flooded simultaneously.

(f) Main transverse watertight bulkheads should be spaced at least $(1/3)L^{2/3}$ m apart, where L (in metres) is as defined in regulation I/2(5). Where transverse bulkheads are spaced at a lesser distance, one or more of these bulkheads should be assumed as non-existent in order to achieve the minimum spacing between bulkheads.

(g) If pipes, ducts or tunnels are situated within the assumed extent of damage penetration as defined in subparagraph (b) above, arrangements are to be made so that progressive flooding cannot thereby extend to compartments other than those assumed to be floodable in the calculation for each case of damage.

(h) Where operating experience has shown that other values for subparagraphs (b) and (f) above are more appropriate, those values should be used.

(3) Survival assumptions

The vessel is considered to survive the conditions of damage specified in paragraph (2) above, provided the vessel remains afloat in a condition of stable equilibrium and satisfies the following stability criteria:

(a) The stability in the final condition of flooding may be regarded as sufficient if the righting lever curve has a minimum range of 20° beyond the position of equilibrium in association with a residual righting lever of at least 100 mm. The area under the righting lever curve within this range should be not less than 0.0175 m-rad. Consideration should be given to the potential hazard presented by protected or unprotected openings which may become temporarily immersed within the range of residual stability. The unflooded volume of the poop superstructure around the machinery space casing, provided the machinery casing is watertight at this level, may be taken into consideration in which case the damage waterline should not be above the after end of the top of the poop superstructure deck at the centreline.

(b) The angle of heel in the final condition of flooding should not exceed 20°.

(c) The initial metacentric height of the damaged vessel in the final condition of flooding for the upright position should be positive and not less than 50 mm.

(d) Relaxation from the damage stability requirements should be permitted only if the proportions, arrangements and other characteristics of the vessel are more favourable to stability after damage.

(4) Permeabilities

The permeabilities employed are to be those as calculated or estimated for the individual spaces in question.

(5) Initial condition of loading

The subdivision and stability calculation should be carried out in the worst operating condition in respect of the residual buoyancy and stability in the non-icing condition.

6 Guidance for precautions against freezing of fire mains (part B and part C of chapter V)

In considering the problem of the freezing of fire mains in vessels, the possible solutions of the problem are:

(a) the recirculation of a sufficient quantity of water, if necessary from a heated reservoir;

(b) the use of a dry system of fire main such that there is no water in the line until a control valve in an accessible space protected from frost (on the rising main) is opened;

(c) the use of a leak-off system in which a sufficient quantity of water is allowed to escape from the ends of the fire main; and

(d) the use of a heating system whereby steam, electrical or hot water heating is used to maintain the water in the fire main in a liquid state. The use of insulation may be incorporated in this system in order to avoid heat loss. Heating may also be effective in reducing the quantity of circulating water referred to in paragraphs (a) and (c) of this recommendation.

In any case, the provisions of effective drainage to the fire main and the proper use of the drains by the crew is imperative if freezing of the fire main is to be avoided in low ambient temperatures.

7 Guidance concerning the use of certain plastic materials (regulations V/11 and V/31)

In considering the problem concerning the use of certain plastic materials, particularly in accommodation and service spaces and control stations, the Administration should note that such materials are flammable and may produce excessive amounts of smoke and other toxic products under fire conditions.

8 Guidance on a method of calculation of the minimum distance from the deepest operating waterline to the lowest point of the top of the bulwark or to the edge of the working deck (regulation VI/3)

(1) The minimum vertical distance from the deepest operating waterline to the lowest point of the top of the bulwark or to the edge of the working deck if guard rails are fitted, referred to in regulation VI/3, should be determined for each vessel, taking into account the probability of shipping water on the deck when the vessel is in moderate beam seas when fishing. This probability should not be greater than 5%. The calculations should take account of the damping coefficient associated with the presence of bilge keels or any other roll damping arrangements.

(2) Where no national practice exists, this distance may be determined by means of the following formulae, based upon the regression analysis of results of the calculations of the probability of shipping water on deck, which is assumed to be 5% when the vessel is fishing in beam seas with the significant wave heights of about 2.9 m and about 1.4 m respectively:

$$H = 0.53 + 0.11B + 0.32\,(2.60 - B/d) + 0.85\,(C_B - 0.60) + 0.61\,(GM - 0.70) \text{ metres}$$

for vessels which are intended to stop their fishing operations at the significant wave heights of more than 2.9 m, and

$$H = 0.80 + 0.23\ (2.60 - B/d) + 0.52\ (C_B - 0.60) + 0.62\ (GM - 0.70) \text{ metres}$$

for vessels which are intended to stop their fishing operations at the significant wave heights of 1.4 m; if the significant wave heights are between 2.9 m and 1.4 m, the values of H should be determined by linear interpolation. In the above formulae:

B = maximum breadth of the vessel, measured amidships to the moulded line of the frame in a vessel with a metal shell and to the outer surface of the hull in a vessel with a shell of any other material (metres)

d = maximum permissible moulded draught (metres)

C_B= block coefficient

GM = initial metacentric height (metres)

All dimensions correspond to the deepest operating waterline.

نسخة صادقة مصدّقة من النصّ الجامع للوائح المرفقة ببروتوكول توريمولينوس لعام 1993 المتعلق باتفاقية توريمولينوس الدولية لسلامة سفن الصيد لعام 1977 ، في صيغتها المعدّلة باتفاق كيب تاون لعام 2012 . وقد أودع النصّ الأصلي لدى الأمين العام للمنظمة البحرية الدولية .

此件系《经2012年开普敦协定修订的1977年托雷莫利诺斯国际渔船安全公约1993年托雷莫利诺斯议定书》附则规则文本的核证无误副本，其原件由国际海事组织秘书长保存。

CERTIFIED TRUE COPY of the consolidated text of the regulations annexed to the Torremolinos Protocol of 1993 relating to the Torremolinos International Convention for the Safety of Fishing Vessels, 1977, as modified by the Cape Town Agreement of 2012, the original of which is deposited with the Secretary-General of the International Maritime Organization.

COPIE CERTIFIÉE CONFORME du Texte récapitulatif des règles de l'Annexe du Protocole de Torremolinos de 1993 relatif à la Convention internationale de Torremolinos sur la sécurité des navires de pêche, 1977, tel que modifié par l'Accord du Cap de 2012, dont l'original est déposé auprès du Secrétaire général de l'Organisation maritime internationale.

ЗАВЕРЕННАЯ КОПИЯ сводного текста правил, приложенных к Торремолиносскому протоколу 1993 года к Торремолиносской международной конвенции по безопасности рыболовных судов 1977 года, измененных Кейптаунским соглашением 2012 года, подлинник которого сдан на хранение Генеральному секретарю Международной морской организации.

COPIA AUTÉNTICA CERTIFICADA del texto refundido de las reglas del anexo del Protocolo de Torremolinos de 1993 relativo al Convenio internacional de Torremolinos para la seguridad de los buques pesqueros, 1977, en su forma modificada por el Acuerdo de Ciudad del Cabo de 2012, cuyo original se ha depositado ante el Secretario General de la Organización Marítima Internacional.

عن الأمين العام للمنظمة البحرية الدولية:

国际海事组织秘书长代表：
For the Secretary-General of the International Maritime Organization:
Pour le Secrétaire général de l'Organisation maritime internationale :
За Генерального секретаря Международной морской организации:
Por el Secretario General de la Organización Marítima Internacional:

F. L. K

لندن ، في

伦敦，
London,
Londres, le 24 July 2014
Лондон,
Londres,

J/10863 (A/C/E/F/R/S)

Prin prezenta confirm că textul alăturat este o copie autentică de pe Acordul de la Cape Town din 2012 privind punerea în aplicare a dispoziţiilor Protocolului de la Torremolinos din 1993 referitor la Convenţia internaţională de la Torremolinos pentru siguranţa navelor de pescuit din 1977 (Cape Town, 11 octombrie 2012), copia certificată căruia este depozitată la Arhiva Tratatelor a Ministerului Afacerilor Externe.

Anatol CEBUC
Şef al Direcţiei Drept Internaţional
Ministerului Afacerilor Externe